Wednesday August 17, 2022

10:00 A.M.

The Harrison County Courthouse will be opened with limited seating at the County Commission meeting. However, you may join and listen via Zoom Conference Call by the following steps. Public participation will be allowed during public comment period and/or scheduled appointments.

Join Zoom Meeting

****

https://us02web.zoom.us/j/7628160712

Dial: 1-646-568-7788

Meeting ID: 762 816 0712

Passcode: 270967

Appointments:

10:00 A.M. --- Call to Order --- Invocation --- Pledge of Allegiance

10:05 A.M. --- Estate Hearing for Appointments Set Aside --- David Bolyard

* Shari Lynn Davisson
*Patty Sue Flanagan
*Timothy John Findley
*Deborah Lynn Davisson

NEW BUSINESS – Action Items for Consideration or Approval:

1. Public Comment Period
2. Consent Agenda
3. Payroll Change Notices:
   A. Vincent Oliverio --- On Call Part-Time as Needed --- Effective 08-17-2022 --- Security
   B. Bryan K. Long II --- Part-Time as Needed --- Effective 08-17-2022 --- Staging
4. Minutes and /or Amended Minutes of Previous Meeting: (NONE)
5. Requisitions --- Purchase Orders --- Invoices
   A. Vendor Requisition List of Payments
6. Exonerations --- Corrective Tickets --- Joint Property Application:
   A. Exonerations --- See Exhibit A
   B. Corrective Tickets --- See Exhibit B
7. Consideration of approval of a Project Fund Requisition for the payment of costs associated with the project to be financed from proceeds of the Series 2019 Bonds issued for the Charles Pointe Economic Opportunity Development District, Series 2021 A & B (Development District No. 3 White Oaks Project No. 2) & Series 2008 A (Charles Pointe Project No. 2 – North Land Bay Improvements: (NONE)
8. Review – Discuss – Consider GSA Change Order

9. Consideration of Approval of Project Fund Requisitions for the payment of costs associated with the General Services Administration Building Project to be financed from proceeds of the Series 2020 Bonds issued for the Harrison County Building Commission: (NONE)
10. Review – Discuss - Consider GSA Building Status of Construction --- (Potential Executive Session Pursuant to 6-9A-4(b)(9) to Consider Matters Involving or Affecting the Purchase, Sale or Lease of Property, Advance Construction Planning, the investment of Public Funds or Other Matters Involving Commercial Competition, which if Made Public, Might Adversely Affect the Financial or Other Interest of The County)
11. Review - Discuss – Consider Letter of Support for Grant Application for the City of Clarksburg
12. Review – Discuss – Consider Changing the Commission Meeting Time from 10:00am to 9:00am on Commission Meeting Days
13. Review – Discuss – Consider Entering into an Agreement with Ralph Pederson as an Architect Consultant
14. Administrator's Report
15. Commissioner Comments – Questions

CONSENT AGENDA - (NOTE: Items May Require Discussion, Review and/or Action)

A. Weekly Fiduciary Report from the County Clerk
B. Monthly Fiduciary Commission Settlements: (NONE)
C. Monthly Minutes/Financial Information from Various Boards, Committees and Public Service
    1. Sun Valley PSD --- Meeting Minutes 07/12/2022
    2. Sun Valley PSD --- Financials 07/2022
D. MCM Business Systems has Updated their Name to Visual Edge IT Effective 07-01-2022

TABLED ITEMS - - Items May Require Discussion and /or Approval

T-1. Election Workers Pay Raises (05-18-2022)
T-2. Changes to Employee Handbook Made by County Attorney (06-08-2022).
T-3. Potential Purchase of Parking Lots Adjacent to Courthouse (08-03-2022)

10:05 AM

United States of America

State of West Virginia County of Harrison, ss:

Appointment Set Aside

On Monday, November 15, 2021, GLORIA POST qualified as Personal Representative of the Estate of SHARI LYNN DAVISSON, deceased.

And it appearing to the Clerk that Gloria Post is no longer an employee of Mountain Funeral Group, LLC.

Therefore it is ordered that the former granted administration of GLORIA POST, ADMINISTRATRIX dated Monday, November 15, 2021, be and the same is hereby vacated and set aside.

Deceased Person	**SHARI LYNN DAVISSON**
Social Security Number	
Date of Death	07/08/2021
Surety Name	RLI INSURANCE
Amount of Bond	10,000.00

List of Heirs

SHYANN DAVISSON	DAUGHTER	235 DEWEY STREET, MORGANTOWN, WV 26501
SIERRA FULTINEER	DAUGHTER	1506 W. PIKE STREET, APT. C, CLARKSBURG, WV 26301
TANA DAVISSON	DAUGHTER	993 IRWIN STREET, APT. 4, MORGANTOWN, WV 26501

Subscribed and sworn to before me on this the 17th day of August, 2022.

Susan J. Thomas, President
Harrison County Commission

United States of America

State of West Virginia County of Harrison, ss:

Appointment Set Aside

On Monday, November 15, 2021, GLORIA POST qualified as Personal Representative of the Estate of PATTY SUE FLANAGAN, deceased.

And it appearing to the Clerk that Gloria Post is no longer an employee of Mountain Funeral Group, LLC.

Therefore it is ordered that the former granted administration of GLORIA POST, ADMINISTRATRIX dated Monday, November 15, 2021, be and the same is hereby vacated and set aside.

Deceased Person	**PATTY SUE FLANAGAN**
Social Security Number	
Date of Death	10/23/2021
Surety Name	RLI INSURANCE
Amount of Bond	1,000.00

List of Heirs

FRANCES STEWART	DAUGHTER	2922 WILSONBURG ROAD, CLARKSBURG, WV 26301

Subscribed and sworn to before me on this the 17th day of August, 2022.

Susan J. Thomas, President
Harrison County Commission

United States of America

State of West Virginia County of Harrison, ss:

Appointment Set Aside

On Tuesday, September 7, 2021, GLORIA POST qualified as Personal Representative of the Estate of TIMOTHY JOHN FINDLEY, deceased.

And it appearing to the Clerk that Gloria Post is no longer an employee of Mountain Funeral Group, LLC.

Therefore it is ordered that the former granted administration of GLORIA POST, ADMINISTRATRIX dated Tuesday, September 7, 2021, be and the same is hereby vacated and set aside.

Deceased Person	**TIMOTHY JOHN FINDLEY**
Social Security Number	
Date of Death	07/11/2021
Surety Name	RLI INSURANCE
Amount of Bond	30,000.00

List of Heirs

THOMAS D FINDLEY	BROTHER	7411 288TH STREET, E, GRAHAM, WA 98338
MARLENE J STERLING	SISTER	18202 LA CORTITA STREET, ROWLAND HEIGHTS, CA 91748
COLLEEN K TREFZ	SISTER	235 S. CAMPUS VIEW DRIVE, UNIT 301, PARKERSBURG, WV 26104

Subscribed and sworn to before me on this the 17th day of August, 2022.

_____
Susan J. Thomas, President
Harrison County Commission

United States of America

State of West Virginia County of Harrison, ss:

Appointment Set Aside

On Tuesday, May 11, 2021, GLORIA POST qualified as Personal Representative of the Estate of DEBORAH BAKER, deceased.

And it appearing to the Clerk that Gloria Post is no longer an employee of Mountain Funeral Group, LLC.

Therefore it is ordered that the former granted administration of GLORIA POST, ADMINISTRATRIX dated Tuesday, May 11, 2021, be and the same is hereby vacated and set aside.

Deceased Person	**DEBORAH BAKER**
Social Security Number	
Date of Death	04/03/2019
Surety Name	WESTFIELD INSURANCE
Amount of Bond	1,000.00

List of Heirs

MICHAEL EUGENE BAKER	HUSBAND	51 TATTERSON ROAD, SHINNSTON, WV 26431

Subscribed and sworn to before me on this the 17th day of August, 2022.

Susan J. Thomas, President
Harrison County Commission

PAYROLL CHANGE NOTICE

3-A

DATE OF CHANGE	EMPLOYEE #	SOCIAL SECURITY NO
8/17/2022		| | | - | | | - | | | |

NAME	ADDRESS
Vincent Olliverio	

PHONE	CITY/STATE/ZIP	DEPARTMENT	SHIFT
		Security	On Call

THE CHANGE(S):

All Applicable Boxes	FROM	TO
☐ DEPARTMENT		
☐ JOB		
☑ SHIFT	On Call	
☐ RATE		
☐ ADDRESS/PHONE		
☐ BENEFIT PLAN		
☐ OTHER _____		
☐ OTHER _____		

THE REASON FOR THE CHANGE(S):

- ● HIRED
- ☐ RE-HIRED
- ☐ PROMOTION
- ☐ DEMOTION
- ☐ TRANSFER
- ☐ MERIT INCREASE
- ☐ WAGE SCALE CHANGE
- ☐ LEAVE OF ABSENCE FROM _____ (DATE) UNTIL _____ (DATE)
- ☐ PROBATIONARY PERIOD COMPLETED
- ☐ LENGTH OF SERVICE INCREASE
- ☐ RE-EVALUATION OF EXISTING JOB
- ☐ RESIGNATION
- ☐ RETIREMENT
- ☐ LAYOFF
- ☐ DISCHARGE

TYPE OF LEAVE _____

☐ OTHER (Explain) Part-Time Courthouse Security as needed

AUTHORIZATION:

EMPLOYEE SIGNATURE	DATE
SUPERVISOR SIGNATURE Rob G. Mallory, Sheriff	DATE 08/10/2022
HUMAN RESOURCES MANAGER Laura Tyler	DATE 8/12/2022

Rev 3/16 Re-order Form #08320 ©copyright 2016 Amsterdam Printing, Amsterdam, N.Y. 12010
Toll Free 1-866-466-1438 or online www.amsterdamforms.com
Amsterdam

3B

PAYROLL CHANGE NOTICE

DATE OF CHANGE	EMPLOYEE #	SOCIAL SECURITY NO
8/17/2022		| | | - | | - | | | |

NAME	ADDRESS
Bryan K. Long II	

PHONE	CITY/STATE/ZIP	DEPARTMENT	SHIFT
		Staging	

THE CHANGE(S):

✓ All Applicable Boxes	FROM	TO
☐ DEPARTMENT		
☐ JOB		
☐ SHIFT		
☐ RATE		
☐ ADDRESS/PHONE		
☐ BENEFIT PLAN		
☐ OTHER _____		
☐ OTHER _____		

THE REASON FOR THE CHANGE(S):

- ● HIRED
- ☐ RE-HIRED
- ☐ PROMOTION
- ☐ DEMOTION
- ☐ TRANSFER
- ☐ MERIT INCREASE
- ☐ WAGE SCALE CHANGE
- ☐ LEAVE OF ABSENCE FROM _____ (DATE) UNTIL _____ (DATE)
- ☐ PROBATIONARY PERIOD COMPLETED
- ☐ LENGTH OF SERVICE INCREASE
- ☐ RE-EVALUATION OF EXISTING JOB
- ☐ RESIGNATION
- ☐ RETIREMENT
- ☐ LAYOFF
- ☐ DISCHARGE

TYPE OF LEAVE _____

☐ OTHER (Explain) Effective 8/17/2022, part-time as needed basis
Pay Courthouse Security rate

AUTHORIZATION:

EMPLOYEE SIGNATURE	DATE
SUPERVISOR SIGNATURE Kate J-Matthews, Sheriff	DATE 08/10/2022
HUMAN RESOURCES MANAGER Dawna Pyle	DATE 8/12/2022

Rev 3/16 Re-order Form #08320 ©Copyright 2016 Amsterdam Printing, Amsterdam, N.Y. 12010
Toll Free 1-866-466-1438 or online www.amsterdamforms.com
Amsterdam

August 17, 2022

5-A

Date of Meeting	August 17, 2022		
Work Order Number	Vendor Name	Amount of Invoice-Quote	Description
40270	Robin's Perfect Fit	$20.00	Applied Uniform Patches Dep. Harris
40274	Marsh Hardware & Builder Suppl	$17.50	Locks/Porta Potty/Summit Park
40276	Mid-Atlantic Customer (Kroger)	$69.59	Cultural Day / Energy Express
40277	Alere Toxicology Services, Inc.	$56,056.33	Lab Confirmations Comm.Corr
40278	Clarksburg County Club	$450.00	Pool Party / Parks & Rec.
40279	Bi-County Nutrition Program	$17,750.00	1st Qurter Allotment 2022
40281	Canon Financial Serves	$220.28	Copier Rental Home Confinement
40282	Audubon Animal Clinic	$125.00	Horses/Animal Control
40283	Mirco Distributing	$1,650.00	Hair Follicale Confirmation Comm. Corr.
40284	Alere Toxicology Products Division	$13,750.00	Urine Analysis Supplies Comm.Corr
40285	Advance Auto Parts	$120.61	Parts/Maintenance Courthouse
40286	Advance Auto Parts	$103.20	Air Filters/Restock/County Garage
40287	Alliance Glass	$680.00	Windshields/ Law Enforcement
40288	Appalachian Tire Products	$563.00	Tires / Dump Truck/ Maintenance
40289	Brenda Vernon	$9.92	Reimbursement/Animal Control
40292	Chenoweth Ford	$1,962.87	Various Automobile Parts
40293	County Club Chrysler	$320.96	Aborber/ Sheriff's Unit
40297	Fisher Auto Parts	$130.16	Automobile Parts County Garage
40298	Hart Office Solutions	$137.25	Copier Rental County Clerk
40299	Lowe's Home Improvement	$35.48	Park&Rec. Maintenance Supplies
40300	Otis Elevator Company	$2,673.00	Jail Elevator Repairs
40301	Sandy's True Value	$61.32	Supplies County Garage
40302	Sandy's True Value	$114.23	Courthouse Maintenance Supplies
40303	Software Systems Incorporated	$2,001.57	Levels 2 & 3 Maintenance Courthouse
40304	Toshiba Financial Services	$76.69	Copier Rental Voters
40305	WV Outdoor Power	$121.65	Courthouse Maintenance Supplies
40306	Crendential Research	$208.50	Background Checks Courthouse
40307	Greater Harrison PSD	$34.50	Service Quiet Dell School
40308	Vertical Transport Consulting	$301.69	Elevator Inspection Courthouse
40309	Lowe's Home Improvement	$2,677.38	Supplies Comm.Correction
40310	APCO International	$30.00	Training Renewal/C.Cutright/911
40313	Casto Technical Services	$13,013.41	HVAC Unit Coils Replaced Jail
40316	U S Cellular	$215.80	Cellular Service Animal Control
40317	Clarksburg Harrison Public Library	$60,013.00	1st Quarter Allotment
40318	U S Cellular	$7,004.59	Tablets & Modem Rental Courthouse
40319	Pitney Bowes Global Financial Services	$2,616.57	Lease Mail Machine Courthouse
40320	Skasiks Cleaners	$116.30	2 Month Bill Process Servers
40321	Skasiks Cleaners	$1,455.90	2 Month Bill Law Enforcement
40322	Skasiks Cleaners	$410.55	2 Month Bill Courthouse Security
40323	Bridgeport Express Care	$150.00	PhysicalsDep.Harris & Dep.McManus
40325	Theodore A. Glance	$995.00	Employment Evaluation/L.E.
40326	Hart Office Solutions	$45.00	Black Toner Staging Area

August 17, 2022

40329	Truist Bank	$631.60	Meals, Fuel, Travel Law Enforc
40330	Truist Bank	$703.67	Meals, Fuel, Travel Law Enforc
40333	Kroll Associates, Inc.	$58,454.55	385 Endpoints for Cybersecurity
40335	CDWG	$264.72	Power Supplies/Law Enforce
40336	U S Cellular	$176.70	Cellular Service Law Enforce
40337	West Virginia Paging	$7.00	Pager Law Enforcement
40343	Truist Bank	$526.10	Clothing Allowance Deputies
40346	Robin's Perfect Fit	$84.00	Alterations Deputy Pruitt
40347	Truist Bank	$132.95	Meals, Fuel, Travel Law Enforc
40350	Audubon Animal Clinic	$50.00	Examination Animal Control
40351	A-1 Exterminationg	$50.00	Pest Control Animal Control
40352	Truist Bank	$25.89	Printer Rollers Day Report
40354	Truist Bank	$1,399.96	Travel Chris Cutright 911
40355	Truist Bank	$1,382.12	Various Supplies County Commission
40356	Truist Bank	$363.39	Supplies Animal Control
40358	MCM Business Systems	$355.97	Toner Various Locations
40359	Ar-Tel Communications	$5,882.00	Spelter Vol. Fire Department
40360	West Virginia Work Force	$1,225.72	Unemployment General County
40361	Benny's Boot Hill	$134.91	Safety Toe Shoes Dep.Shaffer
40362	Tara Hodge	$10.85	Travel Reimbursement animal control
40363	Waste Management	$26.65	Landfill Waste Courthouse
40364	WV Italian Heritage Festival	$3,000.00	Special Funding Request
40365	Summit Park PSD	$117.04	Summit Park Ball Field
40366	Fed Ex	$182.92	Postage Various Offices
40367	Jefferson County Sheriff's Department	$30.00	Process Service Pros. Atty
40368	Desoto County Sheriff's Department	$40.00	Process Service Pros. Atty
40369	Truist Bank	$140.56	Various Charges Pros. Atty
40370	LeAnn Shuck	$21.45	Wellness for July 2022
40371	Truist Bank	$319.95	Printer Fuser/County Clerk
40372	United Refridgeration	$117.84	HVAC Filters Parks&Rec.Complex
40373	Mon Power	$16.40	Spelter Park
40374	West Union Bank	$29,960.44	Truck Payment Anmoore VFD
40376	Pace Shredding	$447.30	Shredding Service Courthouse
40377	Frontier Communication	$5,318.47	Service 911 Center
	Total	$300,109.92	

4-A
SEE EXHIBIT A

Exhibit A Exonerations

A. RE 184 Allen Randall & Jennifer L

RE 184

EXONERATIONS

STATE OF WEST VIRGINIA **COUNTY OF HARRISON**

Real Estate

At a regular term of the County Commission of Harrison County, West Virginia, held at the Courthouse of said County, Commissioners

David Hinkle **Susan J. Thomas** **Patsy Trecost II**

On the 17th day of August, 2022 issued the following order, which was made and entered, to-wit:

Upon application of DMCNEMAR for **ALLEN RANDALL L & JENNIFER L** whose address is, 1258 MAIN ST SALEM, WV 26426, who proved to the satisfaction of the Commission that said property owner is aggrieved by an erroneous assessment of **1140** on **1 LOT 56 W SALEM 1ST ADD**, Class **3/4** in **TENMILE-OUTSIDE**, Harrison County, West Virginia, which should have been assessed at **1140**, Class **2** in and for the year **2022**, resulting in a difference in assessed value of **0**. The Commission therefore, orders that the said applicant be and is hereby exonerated from the said erroneous assessment and from the payment of the taxes so assessed, in and for the year **2022**, if the same has not been paid, and if it has been paid, that the Sheriff refund the same to them.

The commission certifies the following facts upon which it grants said relief:

The above mentioned property is close proximity to homesite of parcel 63, therefore Class 2 applies. Exonerate a value of 570 at a Class 3 rate of levy to correct the overcharge.

District: **18 - TENMILE-OUTSIDE**
Account No. **6766145**
Ticket No. **59656**
Tax Year **2022**

Amount Exonerated: $ 13.43

PRESENT: Prosecuting Attorney
(or)
PRESENT: Tax Commissioner

APPROVED: President, County Commission

ORDER ENTERED TO STATE AUDITOR

ATTEST: County Clerk

ASSESSOR Joseph A Romano

6-B
SEE EXHIBIT B

Exhibit B Corrective Tickets

A. RE 114 Allen Randall Lee
B. RE 115 Allen Randall L. & Jennifer L.
C. RE 116 Allen Randall L. & Jennifer L.
D. RE 117 Casandra A. Bennett
E. RE 118 Casandra A. Bennett
F. RE 119 Judith A. Corkrean
G. RE 120 Eva M. Hall
H. RE 121 Eva M. Hall
I. RE 122 Charlotte A. Martin
J. RE 123 Sandra Ward Miller
K. RE 124 Nelson Phillips & Nathan
L. RE 125 Nelson Phillips & Nathan

RE114

CORRECTIVE TICKET

STATE OF WEST VIRGINIA **COUNTY OF HARRISON**

Real Estate

At a regular term of the County Commission of Harrison County, West Virginia, held at the Courthouse of said County, Commissioners

David Hinkle **Susan J. Thomas** **Patsy Trecost II**

On the 17th day of August, 2022 issued the following order, which was made and entered, to-wit:

Upon application of DMCNEMAR for **ALLEN RANDALL LEE** whose address is, 1258 MAIN ST SALEM, WV 26426, who proved to the satisfaction of the Commission that said property owner is aggrieved by an erroneous assessment of **2700** on **2 LOTS 48-49 W OF SALEM INC PAR 62**, Class 3/4 in **TENMILE-OUTSIDE**, Harrison County, West Virginia, which should have been assessed at **2700**, in and for the year **2022**. The Commission therefore, orders that the said applicant be and is hereby exonerated from the said erroneous assessment and from the payment of the taxes so assessed, and that a corrected assessment and the payment of the correct taes so assessed in and for the year **2022**, as described below, be so ordered.

The commission certifies the following facts upon which it grants said relief:

The above mentioned property is owner occupied, therefore Class 2 applies. Create ticket of a value of 2700 (L-2100 B-600) at a Clas 2 rate of levy to properly assess and allow discounts and half year payments as afforded all taxpayers.

District **18 - TENMILE-OUTSIDE**
Account No. **6381667**
Ticket No. **59661**
Tax Year **2022**

Amount Exonerated: **$63.63**
Corrected Ticket Amount: **$ 31.81**
TIF: #

PRESENT: Prosecuting Attorney
(or)
PRESENT: Tax Commissioner

APPROVED: President, County Commission

ORDER ENTERED TO STATE AUDITOR

ATTEST: County Clerk

ASSESSOR

RE 115

CORRECTIVE TICKET

STATE OF WEST VIRGINIA **COUNTY OF HARRISON**

Real Estate

At a regular term of the County Commission of Harrison County, West Virginia, held at the Courthouse of said County, Commissioners

David Hinkle **Susan J. Thomas** **Patsy Trecost II**

On the 17th day of August, 2022 issued the following order, which was made and entered, to-wit:

Upon application of DMCNEMAR for **ALLEN RANDALL L & JENNIFER L** whose address is, 1258 MAIN ST SALEM, WV 26426, who proved to the satisfaction of the Commission that said property owner is aggrieved by an erroneous assessment of **3180** on **3 LOTS 53-54-55 W SALEM 1ST ADD INC PAR 25-24**, Class 3/4 in **TENMILE-OUTSIDE**, Harrison County, West Virginia, which should have been assessed at **3180**, in and for the year **2022**. The Commission therefore, orders that the said applicant be and is hereby exonerated from the said erroneous assessment and from the payment of the taxes so assessed, and that a corrected assessment and the payment of the correct taes so assessed in and for the year **2022**, as described below, be so ordered.

The commission certifies the following facts upon which it grants said relief:

The above mentioned property is close proximity to homesite of parcel 63, therefore Class 2 applies. Create ticket value of 3180 (L-3180) at a Class 2 rate of levy to properly assess and allow discounts and half year payments as afforded all taxpayers.

District **18 - TENMILE-OUTSIDE**
Account No. **6381694**
Ticket No. **59657**
Tax Year **2022**

Amount Exonerated: **$74.94**
Corrected Ticket Amount: **$ 37.47**
TIF: #

PRESENT: Prosecuting Attorney
(or)
PRESENT: Tax Commissioner

APPROVED: President, County Commission

ATTEST: County Clerk

ORDER ENTERED TO STATE AUDITOR

ASSESSOR

RE 116

CORRECTIVE TICKET

STATE OF WEST VIRGINIA **COUNTY OF HARRISON**

Real Estate

At a regular term of the County Commission of Harrison County, West Virginia, held at the Courthouse of said County, Commissioners

David Hinkle **Susan J. Thomas** **Patsy Trecost II**

On the 17th day of August, 2022 issued the following order, which was made and entered, to-wit:

Upon application of DMCNEMAR for **ALLEN RANDALL L & JENNIFER L** whose address is, 1258 MAIN ST SALEM, WV 26426, who proved to the satisfaetion of the Commission that said property owner is aggrieved by an erroneous assessment of **1980** on **1 LOT 52 W SALEM 1ST ADD (USED AS STORAGE)**, Class 3/4 in **TENMILE-OUTSIDE**, Harrison County, West Virginia, which should have been assessed at **1980**, in and for the year **2022**. The Commission therefore, orders that the said applicant be and is hereby exonerated from the said erroneous assessment and from the payment of the taxes so assessed, and that a corrected assessment and the payment of the correct taes so assessed in and for the year **2022**, as described below, be so ordered.

The commission certifies the following facts upon which it grants said relief:

The above mentioned property is close proximity to homesite of parcel 63, therefore Class 2 applies. Create ticket value of 1980 (L-1980) at a Class 2 rate of levy to properly assess and allow discounts and half year payments as afforded all taxpayers.

District **18 - TENMILE-OUTSIDE**
Account No. **36381729**
Ticket No. **59658**
Tax Year **2022**

Amount Exonerated: **$46.66**
Corrected Ticket Amount: **$ 23.33**
TIF: #

PRESENT: Prosecuting Attorney
(or)
PRESENT: Tax Commissioner

APPROVED: President, County Commission

ATTEST: County Clerk

ORDER ENTERED TO STATE AUDITOR

ASSESSOR

RE 117

CORRECTIVE TICKET

STATE OF WEST VIRGINIA **COUNTY OF HARRISON**

Real Estate

At a regular term of the County Commission of Harrison County, West Virginia, held at the Courthouse of said County, Commissioners

David Hinkle **Susan J. Thomas** **Patsy Trecost II**

On the 17th day of August, 2022 issued the following order, which was made and entered, to-wit:

Upon application of DMCNEMAR for **BENNETT CASANDRA A** whose address is, C/O D REYNOLDS INV LLC PO BOX 607 JANE LEW WV 26378, who proved to the satisfaction of the Commission that said property owner is aggrieved by an erroneous assessment of on **3 LOTS PTS 130 TO 132 LYNN HELDRETH ADD INCLS 264-265 ***BACK TAX 2020***, Class 3/4 in **EAGLE-OUTSIDE**, Harrison County, West Virginia, which should have been assessed at , in and for the year **2022**. The Commission therefore, orders that the said applicant be and is hereby exonerated from the said erroneous assessment and from the payment of the taxes so assessed, and that a corrected assessment and the payment of the correct taes so assessed in and for the year **2022**, as described below, be so ordered.

The commission certifies the following facts upon which it grants said relief:

The above mentioned prooperty was duplicate assessement back tax 2020 ticket. The correct back tax ticket #29080. ***CANCEL THIS TICKET & MARK IMPROPER***

District **09 - EAGLE-OUTSIDE**
Account No. **6225872**
Ticket No. **29081**
Tax Year **2022**

Amount Exonerated: **$**
Corrected Ticket Amount: **$**
TIF: #

PRESENT: Prosecuting Attorney
(or)
PRESENT: Tax Commissioner

APPROVED: President, County Commission

ORDER ENTERED TO STATE AUDITOR

ATTEST: County Clerk

ASSESSOR

CORRECTIVE TICKET

RE 118

STATE OF WEST VIRGINIA **COUNTY OF HARRISON**

Real Estate

At a regular term of the County Commission of Harrison County, West Virginia, held at the Courthouse of said County, Commissioners

David Hinkle **Susan J. Thomas** **Patsy Trecost II**

On the 17th day of August, 2022 issued the following order, which was made and entered, to-wit:

Upon application of DMCNEMAR for **BENNETT CASANDRA A** whose address is, C/O D REYNOLDS INV LLC PO BOX 607 JANE LEW WV 26378, who proved to the satisfaction of the Commission that said property owner is aggrieved by an erroneous assessment of on **3 LOTS PTS 130 TO 132 LYNN HELDRETH ADD INCLS 264-265 ***BACK TAX 2020***, Class 3/4 in **EAGLE-OUTSIDE**, Harrison County, West Virginia, which should have been assessed at , in and for the year **2022**. The Commission therefore, orders that the said applicant be and is hereby exonerated from the said erroneous assessment and from the payment of the taxes so assessed, and that a corrected assessment and the payment of the correct taes so assessed in and for the year **2022**, as described below, be so ordered.

The commission certifies the following facts upon which it grants said relief:

The above mentioned prooperty was duplicate assessement back tax 2020 ticket. The correct back tax ticket #29080. ***CANCEL THIS TICKET & MARK IMPROPER***

District **09 - EAGLE-OUTSIDE**
Account No. **6225872**
Ticket No. **29082**
Tax Year **2022**

Amount Exonerated: **$**
Corrected Ticket Amount: **$**
TIF: #

PRESENT: Prosecuting Attorney
(or)

PRESENT: Tax Commissioner

ATTEST: County Clerk

APPROVED: President, County Commission

ORDER ENTERED TO STATE AUDITOR

ASSESSOR

RE 119

CORRECTIVE TICKET

STATE OF WEST VIRGINIA **COUNTY OF HARRISON**

Real Estate

At a regular term of the County Commission of Harrison County, West Virginia, held at the Courthouse of said County, Commissioners

David Hinkle **Susan J. Thomas** **Patsy Trecost II**

On the 17th day of August, 2022 issued the following order, which was made and entered, to-wit:

Upon application of DMCNEMAR for **CORKREAN JUDITH A** whose address is, PO BOX 114 LOST CREEK, WV 26385, who proved to the satisfaction of the Commission that said property owner is aggrieved by an erroneous assessment of **26460** on **2 LOT 52 & 53 BASSEL ADD INC PAR 56**, Class 3/4 in **GRANT-LOST CREEK**, Harrison County, West Virginia, which should have been assessed at **26460**, in and for the year **2022**. The Commission therefore, orders that the said applicant be and is hereby exonerated from the said erroneous assessment and from the payment of the taxes so assessed, and that a corrected assessment and the payment of the correct taes so assessed in and for the year **2022**, as described below, be so ordered.

The commission certifies the following facts upon which it grants said relief:

The above mentioned property is personal use therefore Class 2 applies. Create ticket of a value of 26460 (L-5580 B-20880) at a Class 2 rate of levt to properly assess and allow discounts and half year payments as afforded all taxpayers.

District **13 - GRANT-LOST CREEK**
Account No. **6062976**
Ticket No. **43157**
Tax Year **2022**

Amount Exonerated: **$755.9**
Corrected Ticket Amount: **$ 377.95**
TIF: #

PRESENT: Prosecuting Attorney
(or)
PRESENT: Tax Commissioner

APPROVED: President, County Commission

ATTEST: County Clerk

ORDER ENTERED TO STATE AUDITOR

ASSESSOR

RE120

CORRECTIVE TICKET

STATE OF WEST VIRGINIA **COUNTY OF HARRISON**

Real Estate

At a regular term of the County Commission of Harrison County, West Virginia, held at the Courthouse of said County, Commissioners

David Hinkle **Susan J. Thomas** **Patsy Trecost II**

On the 17th day of August, 2022 issued the following order, which was made and entered, to-wit:

Upon application of DMCNEMAR for **HALL EVA M** whose address is, 4444 BIG ELK WALLACE 26448-8539, who proved to the satisfaction of the Commission that said property owner is aggrieved by an erroneous assessment of **0** on **8 AC BIG ELK LOT 12 HELDRETH FARM** , Class 3/4 in **SARDIS**, Harrison County, West Virginia, which should have been assessed at **4200**, in and for the year **2022**. The Commission therefore, orders that the said applicant be and is hereby exonerated from the said erroneous assessment and from the payment of the taxes so assessed, and that a corrected assessment and the payment of the correct taes so assessed in and for the year **2022**, as described below, be so ordered.

The commission certifies the following facts upon which it grants said relief:

The above mentioned property was split out of combined account #6135498 which in error had parcels 9 13 & 14 values attached due to copy key error. Create ticket of a value of 4200 (L-4200) at a Class 2 rate of levy to properly assess and allow discounts and half year payments as afforded all taxpayers.

District **14 - SARDIS**
Account No. **6994767**
Ticket No.
Tax Year **2022**

Amount Exonerated: **$0**
Corrected Ticket Amount: **$ 49.49**
TIF: #

PRESENT: Prosecuting Attorney
(or)
PRESENT: Tax Commissioner

APPROVED: President, County Commission

ORDER ENTERED TO STATE AUDITOR

ATTEST: County Clerk

ASSESSOR Joseph G Ramos

RE 121

CORRECTIVE TICKET

STATE OF WEST VIRGINIA **COUNTY OF HARRISON**

Real Estate

At a regular term of the County Commission of Harrison County, West Virginia, held at the Courthouse of said County, Commissioners

David Hinkle **Susan J. Thomas** **Patsy Trecost II**

On the 17th day of August, 2022 issued the following order, which was made and entered, to-wit:

Upon application of DMCNEMAR for **HALL EVA M** whose address is, 4444 BIG ELK RD WALLACE, WV 26448, who proved to the satisfaction of the Commission that said property owner is aggrieved by an erroneous assessment of **62340** on **8 AC BIG ELK LOT 12 HELDRETH FARM** , Class **2** 3/4 in **SARDIS**, Harrison County, West Virginia, which should have been assessed at **62340**, in and for the year **2022**. The Commission therefore, orders that the said applicant be and is hereby exonerated from the said erroneous assessment and from the payment of the taxes so assessed, and that a corrected assessment and the payment of the correct taes so assessed in and for the year **2022**, as described below, be so ordered.

The commission certifies the following facts upon which it grants said relief:

The above mentioned property was a combined account which one parcel was split out of & sold for 2022 tax year. The whole ticket is in error creating new tickets of correction. ***CANCEL THIS TICKET & MARK IMPROPER***

District **14 - SARDIS**
Account No. **6135498**
Ticket No. **45696**
Tax Year **2022**

Amount Exonerated: **$734.61**
Corrected Ticket Amount: **$ 734.61**
TIF: #

PRESENT: Prosecuting Attorney
(or)
PRESENT: Tax Commissioner

APPROVED: President, County Commission

ORDER ENTERED TO STATE AUDITOR

ATTEST: County Clerk

ASSESSOR

RE 122

CORRECTIVE TICKET

STATE OF WEST VIRGINIA **COUNTY OF HARRISON**

Real Estate

At a regular term of the County Commission of Harrison County, West Virginia, held at the Courthouse of said County, Commissioners

David Hinkle **Susan J. Thomas** **Patsy Trecost II**

On the 17th day of August, 2022 issued the following order, which was made and entered, to-wit:

Upon application of DMCNEMAR for **MARTIN CHARLOTTE A** whose address is, 4541 BIG ELK RD WALLACE WV 26448-8540, who proved to the satisfaction of the Commission that said property owner is aggrieved by an erroneous assessment of **0** on **29.67 AC BIG ELK LOTS 4-10-11 HELDRETH FARM INC PCL 13 & 14**, Class 3/4 in **SARDIS**, Harrison County, West Virginia, which should have been assessed at **58140**, in and for the year **2022**. The Commission therefore, orders that the said applicant be and is hereby exonerated from the said erroneous assessment and from the payment of the taxes so assessed, and that a corrected assessment and the payment of the correct taes so assessed in and for the year **2022**, as described below, be so ordered.

The commission certifies the following facts upon which it grants said relief:

In error this combined account, with parcels 4-9-13-14, got copy keyed with all values attached to parcel 4. The parcel 4 should have been pulled out of combined account & setup separately. Create ticket of a value of 58140 (L-19680 B-38460) at a Class 2 rate of levy to properly assess and allow discounts and half year payments as afforded all taxpayers.

District **14 - SARDIS**
Account No. **06135498**
Ticket No.
Tax Year **2022**

Amount Exonerated: **$0**
Corrected Ticket Amount: **$ 685.12**
TIF: #

PRESENT: Prosecuting Attorney
(or)
PRESENT: Tax Commissioner

APPROVED: President, County Commission

ORDER ENTERED TO STATE AUDITOR

ATTEST: County Clerk

ASSESSOR Joseph A Romano

RE 123

CORRECTIVE TICKET

STATE OF WEST VIRGINIA **COUNTY OF HARRISON**

Real Estate

At a regular term of the County Commission of Harrison County, West Virginia, held at the Courthouse of said County, Commissioners

David Hinkle **Susan J. Thomas** **Patsy Trecost II**

On the 17th day of August, 2022 issued the following order, which was made and entered, to-wit:

Upon application of DMCNEMAR for **MILLER SANDRA WARD** whose address is, 1383 DUCK CREEK RD LOST CREEK WV 26385-7468, who proved to the satisfaction of the Commission that said property owner is aggrieved by an erroneous assessment of **2820** on **PT 4.32 AC WEST FORK (.10 AC FOR PP MH)**, Class 3/4 in **GRANT-OUTSIDE**, Harrison County, West Virginia, which should have been assessed at **2820**, in and for the year **2022**. The Commission therefore, orders that the said applicant be and is hereby exonerated from the said erroneous assessment and from the payment of the taxes so assessed, and that a corrected assessment and the payment of the correct taes so assessed in and for the year **2022**, as described below, be so ordered.

The commission certifies the following facts upon which it grants said relief:

The above mentioned property was assessed for land for personal property mobile home. The mobile home was gone and the county court split was erroneously left. Create a ticket value of 2820 (L-2820) at a Class 2 rate of levy to properly assess and allow discounts and half year payments as afforded all taxpayers.

District **12 - GRANT-OUTSIDE**
Account No. **6303305**
Ticket No. **41381**
Tax Year **2022**

Amount Exonerated: **$66.46**
Corrected Ticket Amount: **$ 33.23**
TIF: #

PRESENT: Prosecuting Attorney
(or)
PRESENT: Tax Commissioner

APPROVED: President, County Commission

ATTEST: County Clerk

ORDER ENTERED TO STATE AUDITOR

ASSESSOR Joseph A Romano

RE 124

CORRECTIVE TICKET

STATE OF WEST VIRGINIA **COUNTY OF HARRISON**

Real Estate

At a regular term of the County Commission of Harrison County, West Virginia, held at the Courthouse of said County, Commissioners

David Hinkle **Susan J. Thomas** **Patsy Trecost II**

On the 17th day of August, 2022 issued the following order, which was made and entered, to-wit:

Upon application of DMCNEMAR for **PHILLIPS NELSON & NATHAN** whose address is, 5360 ASH ST CLARKSBURG, WV 26301, who proved to the satisfaction of the Commission that said property owner is aggrieved by an erroneous assessment of **19080** on **5 AC WEST FORK** , Class 3/4 in **UNION-OUTSIDE**, Harrison County, West Virginia, which should have been assessed at **19080**, in and for the year **2022**. The Commission therefore, orders that the said applicant be and is hereby exonerated from the said erroneous assessment and from the payment of the taxes so assessed, and that a corrected assessment and the payment of the correct taes so assessed in and for the year **2022**, as described below, be so ordered.

The commission certifies the following facts upon which it grants said relief:

The above mentioned property is Nathan's residence per Robert Nelson, father, in office therefore Class 2 applies. Create ticket of a value of 19080 (L-10200 B-8880) at a Class 2 rate of levy to properly assess and allow discounts and half year payments as afforded all taxpayers.

District **20 - UNION-OUTSIDE**
Account No. **6435707**
Ticket No. **73100**
Tax Year **2022**

Amount Exonerated: **$449.67**
Corrected Ticket Amount: **$ 224.83**
TIF: #

PRESENT: Prosecuting Attorney
(or)
PRESENT: Tax Commissioner

APPROVED: President, County Commission

ATTEST: County Clerk

ORDER ENTERED TO STATE AUDITOR

ASSESSOR

RE 125

CORRECTIVE TICKET

STATE OF WEST VIRGINIA **COUNTY OF HARRISON**

Real Estate

At a regular term of the County Commission of Harrison County, West Virginia, held at the Courthouse of said County, Commissioners

David Hinkle **Susan J. Thomas** **Patsy Trecost II**

On the 17th day of August, 2022 issued the following order, which was made and entered, to-wit:

Upon application of DMCNEMAR for **PHILLIPS NELSON & NATHAN** whose address is, 5360 ASH ST CLARKSBURG, WV 26301, who proved to the satisfaction of the Commission that said property owner is aggrieved by an erroneous assessment of **28020** on **1 LOT #240 LAUREL VALLEY SD** , Class 3/4 in **UNION-OUTSIDE**, Harrison County, West Virginia, which should have been assessed at **28020**, in and for the year **2022**. The Commission therefore, orders that the said applicant be and is hereby exonerated from the said erroneous assessment and from the payment of the taxes so assessed, and that a corrected assessment and the payment of the correct taes so assessed in and for the year **2022**, as described below, be so ordered.

The commission certifies the following facts upon which it grants said relief:

The above mentioned property has a Personal Property double wide here, PP #3006522, for Robert Nelson Phillips therefore Class 2 applies to the land. Create ticket of a value of 28020 (L-28020) at a Class 2 rate of levy to properl assess and allow discounts and half year payments as afforded all taxpayers.

District **20 - UNION-OUTSIDE**
Account No. **6538204**
Ticket No. **73101**
Tax Year **2022**

Amount Exonerated: **$660.37**
Corrected Ticket Amount: **$ 330.18**
TIF: #

PRESENT: Prosecuting Attorney
(or)
PRESENT: Tax Commissioner

APPROVED: President, County Commission

ATTEST: County Clerk

ORDER ENTERED TO STATE AUDITOR

ASSESSOR

Harrison County General Services Building

Project Cost Tracking

as of 8.4.2022

SILLING ARCHITECTS

Financed Total Project Cost *(supplied by Steptoe & Johnson)*	
Building Construction	$15,458,000
Site Demolition Contract	$1,007,000
Project Contingency	$388,507
Balance on A/E Design Contract	$396,900
Past Expenditures that are eligible for reimbursement	$1,458,467
Furniture, Fixtures + Equipment	$850,000
Design Fees (FFE)	$85,000
Estimated Owner Construction Testing	$110,000
Estimated Utility Relocation	$60,000
Total Project Cost	$19,813,874

Current Costs & Remaining Estimates			
Construction Contract Award		$15,458,000	
Site Demolition Contract		$1,007,000	
Demo Change Order 01		$165,540	
Demo Change Order 02		$1,367	
Demo Change Order 03		$21,854	*pending; included in cost*
Change Order 01	*storm piping, conflicts in Madoc, etc.*	$50,800	
Change Order 02	*over-excavation soils beyond allowance*	$136,975	
Change Order 03	*UTC & underdrain*	$9,876	
Change Order 04	*bottle fillers for day report*	$9,540	
Change Order 05	*extend UTC into existing building*	$26,762	
Change Order 06	*over-excavation soils beyond allowance*	$51,291	
Change Order 07	*Add TV/data outlets, add camera*	$15,865	
Change Order 08	*Add casework, door, cameras*	$27,201	
Change Order 09	*Miscellaneous*	$46,775	
Total Change Order Cost		$563,846	
Balance on A/E Design Contract		$396,900	
Past Expenditures that are eligible for reimbursement		$1,458,467	
Furniture, Fixtures + Equipment			
	Furniture for Building	$390,559	
	Furniture for Day Report	$61,011	
	High Density for County Clerk		
	High Density for Day Report		
Design Fees (FFE)		$85,000	
Owner Construction Testing		$110,000	
Utility Relocation		$52,207	
Total Current Project Cost		$19,582,990	

Owner to verify

Project Cost Over/Under -$230,884

AIA® Document G701™ – 2017

Change Order

PROJECT: *(Name and address)*	CONTRACT INFORMATION:	CHANGE ORDER INFORMATION:
Harrison County General Services Building	Contract For: General Construction	Change Order Number: 09
	Date: Sept 29,2020	Date: 7.18.2022
OWNER: *(Name and address)*	**ARCHITECT:** *(Name and address)*	**CONTRACTOR:** *(Name and address)*
Harrison County Commission 301 West Main Street Clarksburg, WV 26301	Silling Associates, Inc. 405 Capitol Street, Upper Atrium Charleston, WV 25301	Rycon Construction 2501 Smallman St Suite 100 Pittsburgh, PA 15222

THE CONTRACT IS CHANGED AS FOLLOWS:

(Insert a detailed description of the change and, if applicable, attach or reference specific exhibits. Also include agreed upon adjustments attributable to executed Construction Change Directives.)

Provide all labor material and equipment to perform the following work.
Rycon Change Request 27 Cut concrete wall to install stone. $4,322.00
Rycon Change Request 29 Cut stone for foundation at entry $1,048.00
Rycon Change Request 36R1 Power and Cat 6 to access control panels. $14,250.00
Rycon Change Request 37 Add AV rack to 2nd floor room 239. $7,140.00
Rycon Change Request 38 Add fall protection in Elev B hoistway. $11,277.00
Rycon Change Request 39 Add power and data to 1st floor entry vestibule for scanner equpment $8,738.00
Total Add $46,775.00

See attached itemizations.

The original Contract Sum was	$	15,458,000.00
The net change by previously authorized Change Orders	$	328,310.00
The Contract Sum prior to this Change Order was	$	15,786,310.00
The Contract Sum will be increased by this Change Order in the amount of	$	46,775.00
The new Contract Sum including this Change Order will be	$	15,833,085.00

The Contract Time will be unchanged by zero (0) days.
The new date of Substantial Completion will be unchanged

NOTE: This Change Order does not include adjustments to the Contract Sum or Guaranteed Maximum Price, or the Contract Time, that have been authorized by Construction Change Directive until the cost and time have been agreed upon by both the Owner and Contractor, in which case a Change Order is executed to supersede the Construction Change Directive.

NOT VALID UNTIL SIGNED BY THE ARCHITECT, CONTRACTOR AND OWNER.

Silling Associates, Inc.	Rycon Contruction	Harrison County Commission
ARCHITECT *(Firm name)*	**CONTRACTOR** *(Firm name)*	**OWNER** *(Firm name)*
SIGNATURE	**SIGNATURE**	**SIGNATURE**
Glenn Savage, Construction Admin	Pat Stone VP operations	Susan Thomas President Harrison County Commission
PRINTED NAME AND TITLE	**PRINTED NAME AND TITLE**	**PRINTED NAME AND TITLE**
7.18.22		
DATE	**DATE**	**DATE**

AIA Document G701™ – 2017. Copyright © 1979, 1987, 2000 , 2001 and 2017 by The American Institute of Architects. All rights reserved. The "American Institute of Architects," "AIA," the AIA Logo, and "AIA Contract Documents" are registered trademarks and may not be used without permission. This document was produced by AIA software at 09:34:32 ET on 08/03/2022 under Order No.2114306247 which expires on 04/03/2023, is not for resale, is licensed for one-time use only, and may only be used in accordance with the AIA Contract Documents® Terms of Service. To report copyright violations, e-mail copyright@aia.org.
User Notes: (3B9ADA45)

RYCON
Construction Inc.
Employee-Owned. Client-Driven.

2501 Smallman Street, Suite 100
Pittsburgh, PA 15222
412-392-2525
www.ryconinc.com

January 17, 2022

Mr. Glenn Savage
Silling Architects
405 Capitol Street, Upper Atrium
Charleston, WV 25301

RE: Harrison County GSB
Change Order Request # 27
Cut concrete wall to install stone

Dear Mr. Savage

RYCON Construction, Inc is please to submit a proposal in the amount of $ 4,322 to cut the concrete wall adjacent to the front entrance to install stone. Please reference RFI # 77 attached.

An itemized cost breakdown of this RFCO accompanies this letter.

We ask that you give us a written response to this proposal within **five days** of receipt of this correspondence. Please advise how you wish to proceed. Thank you.

Sincerely,

Alan Hopperstead
Senior Project Manager

Attachment: Rycon Proposal

cc: Matt Highlands
Dennis James
Tom Hacke
File

RYCON
Construction Inc.

Rycon Construction, Inc.
2525 Liberty Avenue
Pittsburgh, PA 15222
412-392-2525

PROJECT: Harrison County GSB

Request For Change Order (RFCO): Project Job # 4013 RFCO # 27

QUOTATION: Cut concrete wall at the front entrance to install stone. Reference RFI # 77.

Subcontractor	Notes	Subcontractor Cost
R and B Concrete	Cut concrete wall at the front entrance to install stone. Reference RFI # 77.	$ 3,810
Note	Does not include any cost for cutting the stone by the mason.	
	Subtotals:	$ 3,810

Plus	1.000%	of $ -	
Plus	0.10%	of $ -	
Plus	10.00%	of $ -	
Plus	2.00%	of $ -	

Subcontractor Cost	$ 3,810
P&P Bond	$ 38
Bldg Risk Ins	$ 4
Overhead & Profit	$ 385
B&O Tax	$ 85
TOTAL FOR THIS RFCO	4,322

TIME EXTENSION REQUEST TO CONTRACT: 0 Calendar Days

Rycon Construction Inc. requests your approval to proceed with the above change order to our contract. Please indicate your approval by signing below.

Submitted Date: 17-Jan-22

Accepted: Sillings Architect

By: _____

Date: _____

Rycon Construction, Inc.

By: _____
Alan Hoppenstead

Proposal Valid for 30 Days

RYCON Construction Inc.

2501 Smallman Street, Suite 100 Pittsburgh
Pittsburgh, PA 15222 Atlanta
T: 412-392-2525 F: 412-392-2526 Cleveland
www. .com FL. Lauderdale

Request for Information #0077

Subject: To Set Stone

To : Glenn Savage
Silling Architects
405 Capitol Street, Upper Atrium
Charleston, WV 25301
Phone (304) 346-0565
Fax

From: Rycon Construction, Inc.
2501 Smallman Street, Suite 100
Pittsburgh, PA 15222
Phone: (412) 392-2525
Fax: (412) 392-2526

Date : 11/24/2021

Project Name : Harrison County General Services Building

Date Required By: 12/01/2021

Rycon Project #: 4013

Drawing #:

Spec. Section :

Other Reference:

Question:
Please see attached areas where concrete has to be hunched 5 inches for stone to be set to get correct coverage above grade.

Answer:

Mason should remove approximately 1" to 1 1/2" from the back of the cast stone panels in this location. This will reduce the amount of concrete needed removed from the foundation wall. Remove a minimum amount (approx 2 1/2") concrete from the foundation wall taking care not to sever rebar.

G Savage 1.5.22 (Previously discussed)

R and B Concrete Cutting, LLC

59405 Horsemill Road
Shadyside, OH 43947

Invoice

Date	Invoice #
12/22/2021	7452

Rec'd
1/4/22
Renee Barcalow

Bill To
Ryan Construction 2501 Smallman Street Pittsburgh, PA 15222

Terms	Due Date
Net 30	1/21/2022

Description	Amount
Ring saw, 89 feet at 4 inches and 89 feet at 6 inches	3,560.00
Face of building cut to contractor specification, several locations	
2 men trip charge	250.00
Clarksburg, WV	
~~4013-18003~~	
4013-18004	
Total	$3,810.00
Balance Due	$3,810.00

Phone #
740-296-0036 office

E-mail
rnbconcretecut@outlook.com

4013
18003

R and B Concrete Cutting, LLC

59405 Horse Mill Road
Shadyside, OH 43947

Concrete Cutting • Core Drilling • Electric Slab Sawing • Wire Sawing

Licensed and Insured

740-296-0199

No. 7452

NAME: RYCON

DATE: 12-22-2021

ADDRESS: Job 29 South 3rd Street
Clarksburg W. V.

CASH	C.O.D.	CHARGE	TERMS
		✓	20 DAYS

QTY.	DESCRIPTION	PRICE	AMOUNT
~~178~~ 89	~~Feet~~ 14" in R.S. Feet TOTAL	3560	—
~~178~~ 89	~~Feet~~ 6" in R.S. Feet		
	FACE of BUILDING		
	CUT TO CONTRACTOR		
	SPECIFICATION		
	SEVERAL LOCATIONS		
~~355~~ 178	Total TRIP CHARGE 2 MEN	250	—
		TAX	3810 —
		TOTAL	[illegible]

AUTHORIZED SIGNATURE: Dean Jones

RYCON
Construction Inc.
Employee-Owned. Client-Driven.

2501 Smallman Street, Suite 100
Pittsburgh, PA 15222
412-392-2525
www.ryconinc.com

January 31, 2022

Mr. Glenn Savage
Silling Architects
405 Capitol Street, Upper Atrium
Charleston, WV 25301

RE: Harrison County GSB
Change Order Request # 29
Cut stone for foundation wall at front entry

Dear Mr. Savage

RYCON Construction, Inc is please to submit a proposal in the amount of $ 1,048 to cut 1" off back of stone to accommodate the concrete foundation wall at the front entry. Please reference RFI # 77.

An itemized cost breakdown of this RFCO accompanies this letter.

We ask that you give us a written response to this proposal within five days of receipt of this correspondence. Please advise how you wish to proceed. Thank you.

Sincerely,

Alan Hopperstead
Senior Project Manager

Attachment: Rycon Proposal

cc: Matt Highlands
Dennis James
Tom Hacke
File

RYCON
Construction Inc.

Rycon Construction, Inc.
2525 Liberty Avenue
Pittsburgh, PA 15222
412-392-2525

PROJECT: Harrison County GSB

Request For Change Order (RFCO): Project Job # 4013 RFCO # 29

QUOTATION: Cut 1" off back of stone to accommodate the concrete foundation wall at the front entry.

Subcontractor	Notes	Subcontractor Cost
Harris Masonry	Cut 1" off back of stone to accommodate the concrete foundation wall at the front entry.	$ 924
Note		
	Subtotals:	$ 924

Plus	1.000%	of $ -	
Plus	0.10%	of $ -	
Plus	10.00%	of $ -	
Plus	2.00%	of $ -	

Subcontractor Cost	$ 924
P&P Bond	$ 9
Bldg Risk Ins	$ 1
Overhead & Profit	$ 93
B&O Tax	$ 21
TOTAL FOR THIS RFCO	1,048

TIME EXTENSION REQUEST TO CONTRACT: 0 Calendar Days

Rycon Construction Inc. requests your approval to proceed with the above change order to our contract. Please indicate your approval by signing below.

Submitted Date: 31-Jan-22

Accepted: Sillings Architect

By: _____

Date: _____

Rycon Construction, Inc.

By: _____
Alan Hoppenstead

Proposal Valid for 30 Days

#29

HARRIS MASONRY INC.

360 Presto-Sygan Road
Bridgeville, PA 15017
Ph : 412-922-7276

Change Request

To: Alan Hopperstead
Rycon Construction, Inc.
2525 Liberty Ave.
Pittsburgh, PA 15222
Ph: 412-392-2525

Number: 2
Date: 1/20/22
Job: 21-06 Harrison Co. General Svcs Bldg
Phone:

Description: Cut concrete and stone at West Entry

We are pleased to offer the following specifications and pricing to make the following changes:

✓ Cut sill ledge between Column C & C.5 in concrete foundation

✓ Cut 1" off back of stone where foundation concrete was not poured to accomodate exterior wall line as follows:
Stone A9 at column C
Stones A14, A15 & D8 at column D.8

Description		Quantity	Unit	Unit Price	Price
Foreman hours		8.00	hr	$75.00	$600.00
Laborer hours		4.00	hr	$50.00	$200.00
				Subtotal:	$800.00
	Overhead		$800.00	10.00%	$80.00
	Profit		$880.00	5.00%	$44.00
				Total:	$924.00

If you have any questions, please contact me at (412)922-7272.

Submitted by: Russ Schoerner
Harris Masonry Inc

Approved by: _____
Date: _____

RYCON
Construction Inc.
Employee-Owned. Client-Driven.

2501 Smallman Street, Suite 100
Pittsburgh, PA 15222
412-392-2525
www.ryconinc.com

June 6, 2022

Mr. Glenn Savage
Silling Architects
405 Capitol Street, Upper Atrium
Charleston, WV 25301

RE: Harrison County GSB
Change Order Request # 36R1
Power and CAT6 to Access Control Panels

Dear Mr. Savage

RYCON Construction, Inc is please to submit a proposal in the amount of $ 14,250 to provide Power and CAT6 cabling to the Access Control Panels not indicated on the drawings. This additional work will not be completed by the June 10, 2022 substantial completion date.

An itemized cost breakdown of this RFCO accompanies this letter.

We ask that you give us a written response to this proposal within **five days** of receipt of this correspondence. Please advise how you wish to proceed. Thank you.

Sincerely,

Alan Hopperstead
Senior Project Manager

Attachment: Rycon Proposal

cc: Matt Highlands
Dennis James
Tom Hacke
File

RYCON
Construction Inc.

Rycon Construction, Inc.
2525 Liberty Avenue
Pittsburgh, PA 15222
412-392-2525

PROJECT: Harrison County GSB

Request For Change Order (RFCO): Project Job # 4013 RFCO # 36R1

QUOTATION: Provide Power and CAT6 cabling to the Access Control Panels not indicated on the drawings.

Subcontractor	Notes	Subcontractor Cost
Tri County	Provide Power and CAT6 cabling to the Access Control Panels not indicated on the drawings.	$ 12,562
		$ -
** Note **	No patching of finishes are included. If finished get damaged by completing this work it will be completed on a T&M basis.	
	This additional work will not be completed by June 10, 2022 substantial completion date. Rycon reserves its right to request an extention of time of days to complete this work after June 10, 2022.	
	Subtotals:	$ 12,562

Plus	1.000%	of $	-
Plus	0.10%	of $	-
Plus	10.00%	of $	-
Plus	2.00%	of $	-

Subcontractor Cost	$ 12,562
P&P Bond	$ 126
Bldg Risk Ins	$ 13
Overhead & Profit	$ 1,270
B&O Tax	$ 279
TOTAL FOR THIS RFCO	14,250

TIME EXTENSION REQUEST TO CONTRACT: TBD Calendar Days

Rycon Construction Inc. requests your approval to proceed with the above change order to our contract. Please indicate your approval by signing below.

Submitted Date: 19-Apr-22

Accepted: Sillings Architect

By: _____

Date: _____

Rycon Construction, Inc.

By: _____
Alan Hopperstead

Proposal Valid for 30 Days

TRI-COUNTY ELECTRIC

3-Jun-22

HARRISON COUNTY GSB
FILE:FTCE\77807651\RFP19R.XLS

DESCRIPTION	QTY	MAT. UNIT	MAT. TOTAL	LABOR UNIT	LABOR TOTAL
POWER & DATA FOR SECURITY PANELS - 11 PANELS TOTAL					
4" SQ BOX	8	$ 1.68	$ 13.44	0.300	2.40
BLANK COVER	8	$ 0.54	$ 4.32	0.060	0.48
3/4" EMT CONDUIT	360	$ 1.14	$ 410.40	0.060	21.60
3/4" EMT CONN	16	$ 0.40	$ 6.40	0.090	1.44
3/4" EMT CPLG	36	$ 0.42	$ 15.12	0.060	2.16
3/4" EMT STRUT STRAP	7.2	$ 1.21	$ 8.71	0.080	0.58
2' SR. STRUT	18	$ 3.15	$ 56.70	0.250	4.50
BEAM CLAMPS/HARDWARE	36	$ 2.95	$ 106.20	0.280	10.08
#12 THHN WIRE	1080	$ 0.19	$ 205.28	0.006	6.48
SPARE 1P-20A BREAKER TERM	4	$ -	$ -	0.500	2.00
DATA PURCHASE/INSTALL/COORD	1	$ 3,300.00	$ 3,300.00	2.000	2.00
CAT6A	11	$ -	$ -	0.000	0.00
RJ45 CAT6A TERM	22	$ -	$ -	0.000	0.00
TESTING	11	$ -	$ -	0.000	0.00
4" SQ BOX	4	$ 1.68	$ 6.72	0.300	1.20
BLANK COVER	4	$ 0.54	$ 2.16	0.060	0.24
3/4" EMT CONDUIT	110	$ 1.14	$ 125.40	0.060	6.60
3/4" EMT CONN	11	$ 0.40	$ 4.40	0.090	0.99
3/4" EMT STRUT STRAP	22	$ 1.21	$ 26.62	0.080	1.76
3/4" PLASTIC BUSHING	11	$ 0.09	$ 0.99	0.190	2.09
2' SR. STRUT	22	$ 3.15	$ 89.30	0.250	5.50
BEAM CLAMPS/HARDWARE	44	$ 2.95	$ 129.80	0.280	12.32
SUPERVISION	1	$ -	$ -	10.000	10.00

MATERIAL TOTAL		$ 4,491.96
6% SALES TAX		$ 269.52
LABOR (HRS)	94.42	
LABOR @ 63 PER HR		$ 5,948.21
2% B&O TAX		$ 214.19
15% OV/PROFIT		$ 1,638.58
GRAND TOTAL		$ 12,562.46

RYCON
Construction Inc.
Employee-Owned. Client-Driven.

2501 Smallman Street, Suite 100
Pittsburgh, PA 15222
412-392-2525
www.ryconinc.com

April 20, 2022

Mr. Glenn Savage
Silling Architects
405 Capitol Street, Upper Atrium
Charleston, WV 25301

RE: Harrison County GSB
Change Order Request # 37
Add AV Rack to second floor

Dear Mr. Savage

RYCON Construction, Inc is please to submit a proposal in the amount of $ 7,140 to add an AV Rack to the second floor in room # 238 for equipment in room # 239. Please provide approval on or before May 3, 2022 to avoid additional costs and time to complete the work for project completion.

An itemized cost breakdown of this RFCO accompanies this letter.

We ask that you give us a written response to this proposal within **five days** of receipt of this correspondence. Please advise how you wish to proceed. Thank you.

Sincerely,

Alan Hopperstead
Senior Project Manager

Attachment: Rycon Proposal

cc: Matt Highlands
Dennis James
Tom Hacke
File

RYCON
Construction Inc.

Rycon Construction, Inc.
2525 Liberty Avenue
Pittsburgh, PA 15222
412-392-2525

PROJECT: Harrison County GSB

Request For Change Order (RFCO): Project Job # 4013 RFCO # 37

QUOTATION: ADD an AV Rack to the second floor in room 238 for equipment in room 239. None indicated on the drawings to be supplied.

Subcontractor	Notes	Subcontractor Cost
Tri County	ADD an AV Rack to the second floor in room 238 for equipment in room 239.	$ 6,294
Note	Please provide approval on or before May 3, 2022 to avoid additional costs and time to complete the work for project completion.	
	Subtotals:	$ 6,294

Plus	1.000%	of $	-
Plus	0.10%	of $	-
Plus	10.00%	of $	-
Plus	2.00%	of $	-

Subcontractor Cost	$ 6,294
P&P Bond	$ 63
Bldg Risk Ins	$ 6
Overhead & Profit	$ 636
B&O Tax	$ 140
TOTAL FOR THIS RFCO	7,140

TIME EXTENSION REQUEST TO CONTRACT: 0 Calendar Days

Rycon Construction Inc. requests your approval to proceed with the above change order to our contract. Please indicate your approval by signing below.

Submitted Date: 20-Apr-22

Accepted: Stillings Architect

By: _____

Date: _____

Rycon Construction, Inc.

By: _____
Alan Hopperstead

Proposal Valid for 30 Days

TRI-COUNTY ELECTRIC

19-Apr-22

HARRISON COUNTY GSB
FILE:FTCE\77807651\RFP20.XLS

DESCRIPTION	QTY	MAT. UNIT	MAT. TOTAL	LABOR UNIT	LABOR TOTAL
POWER & DATA FOR AV RACKS 238 & 328					
4" SQ BOX	2	$ 1.68	$ 3.36	0.300	0.60
BLANK COVER	2	$ 0.54	$ 1.08	0.060	0.12
TILE RING	2	$ 1.50	$ 3.00	0.060	0.12
3/4" EMT CONDUIT	180	$ 1.14	$ 205.20	0.060	10.80
3/4" EMT CONN	16	$ 0.40	$ 6.40	0.090	1.44
3/4" EMT CPLG	36	$ 0.42	$ 15.12	0.060	2.16
3/4" EMT STRUT STRAP	7.2	$ 1.21	$ 8.71	0.080	0.58
2' SR. STRUT	9	$ 3.15	$ 28.35	0.250	2.25
BEAM CLAMPS/HARDWARE	18	$ 2.95	$ 53.10	0.280	5.04
#12 THHN WIRE	540	$ 0.19	$ 102.64	0.006	3.24
DUPLEX RECEPTACLE	4	$ 3.50	$ 14.00	0.350	1.40
DOUBLE DUPLEX COVER	2	$ 1.27	$ 2.54	0.060	0.12
SPARE 1P-20A BREAKER TERM	2	$ -	$ -	0.500	1.00
✓ DATA PURCHASE/INSTALL/COORD	1	$ 1,400.00	$ 1,400.00	2.000	2.00
CAT6A	2	$ -	$ -	0.000	0.00
RJ45 CAT6A TERM	4	$ -	$ -	0.000	0.00
TESTING	4	$ -	$ -	0.000	0.00
4" SQ BOX	2	$ 1.68	$ 3.36	0.300	0.60
BLANK COVER	2	$ 0.54	$ 1.08	0.060	0.12
TILE RING	2	$ 1.50	$ 3.00	0.060	0.12
3/4" EMT CONDUIT	20	$ 1.14	$ 22.80	0.060	1.20
3/4" EMT CONN	2	$ 0.40	$ 0.80	0.090	0.18
3/4" EMT CPLG	2	$ 0.42	$ 0.84	0.060	0.12
3/4" EMT STRUT STRAP	4	$ 1.21	$ 4.84	0.080	0.32
3/4" PLASTIC BUSHING	2	$ 0.09	$ 0.18	0.190	0.38
2' SR. STRUT	1	$ 3.15	$ 3.15	0.250	0.25
BEAM CLAMPS/HARDWARE	2	$ 2.95	$ 5.90	0.280	0.56
MIDDLE ATLANTIC RK16 FL RACK	1	$ -	$ -	0.000	0.00
WELTRON SURGE PROTECTOR	1	$ -	$ -	0.000	0.00
MIDDLE ATLANTIC EB2 FLG BLANK	4	$ -	$ -	0.000	0.00
AV RACK LOT	1	$ 515.00	$ 515.00	0.000	0.00
SUPERVISION	1	$ -	$ -	10.000	10.00

MATERIAL TOTAL		$ 2,404.45
6% SALES TAX		$ 144.27
LABOR (HRS)	44.72	
LABOR @ 63 PER HR		$ 2,817.11
2% B&O TAX		$ 107.32
15% OV/PROFIT		$ 820.97
GRAND TOTAL		$ 6,294.11

AV Rack Located in Rm 238 For Equipment to Function in Rm 239. Not Shown on Dwgs to Be Supplied.

JRM TEC, INC.

304-216-1111
rmiller@jrmtec.com
PO BOX 211
Mount Morris PA 15349

Apr 19, 2022

Harrison County General Services Building Project

This proposal provides all labor, material and supervision as required for the installation of 2 additional Cat6A cables to AV Racks..

- 1 Cat6A cable will be installed from the nearest communications closet to Room 238. The network cable will be terminated on an existing Cat6A patch panel on the same floor communications closet.
- 1 Cat6A cable will be installed from the nearest communications closet to Room 228. The network cable will be terminated on an existing Cat6A patch panel on the same floor communications closet.
- The cable will be tested and labeled to match the embedded base.
- Racks are not included.
- Conduits are not included.

✓ Project cost = $1,400.00

Ryan Miller – BICSI RCDD
Vice President/Owner
304-216-1111

---------- Date: 4/19/22

RYCON
Construction inc.
Employee-Owned. Client-Driven.

2501 Smallman Street, Suite 100
Pittsburgh, PA 15222
412-392-2525
www.ryconinc.com

May 24, 2022

Mr. Glenn Savage
Silling Architects
405 Capitol Street, Upper Atrium
Charleston, WV 25301

RE: Harrison County GSB
Change Order Request # 38
Add fall protection wall in Elevator B hoistway

Dear Mr. Savage

RYCON Construction, Inc is please to submit a proposal in the amount of $ 11,277 to add a fall protection wall in Elevator B hoistway to prevent 12" fall hazard due to no handrails. Handrails could not be installed due to low over head.

An itemized cost breakdown of this RFCO accompanies this letter.

We ask that you give us a written response to this proposal within five days of receipt of this correspondence. Please advise how you wish to proceed. Thank you.

Sincerely,

Alan Hopperstead
Senior Project Manager

Attachment: Rycon Proposal

cc: Matt Highlands
Dennis James
Tom Hacke
File

RYCON
Construction Inc.

Rycon Construction, Inc.
2525 Liberty Avenue
Pittsburgh, PA 15222
412-392-2525

PROJECT: Harrison County GSB

Request For Change Order (RFCO): Project Job # 4013 RFCO # 38

QUOTATION: Add a fall protection wall in Elevator B hoistway to prevent 12' fall hazard due to no handrails. Handrails could not be installed due to low over head.

Subcontractor	Notes	Subcontractor Cost
E&R	Build a fall protection wall in elevator B hoistway. T&M.	$ 3,656
Schindler	Operate car for carpenters to build fall protection wall	$ 6,285
Note	Fall protection wall is required per code.	
	Subtotals:	$ 9,941

Plus	1.000%	of $ -	
Plus	0.10%	of $ -	
Plus	10.00%	of $ -	
Plus	2.00%	of $ -	

Subcontractor Cost	$ 9,941
P&P Bond	$ 99
Bldg Risk Ins	$ 10
Overhead & Profit	$ 1,005
B&O Tax	$ 221
TOTAL FOR THIS RFCO	11,277

TIME EXTENSION REQUEST TO CONTRACT: 0 Calendar Days

Rycon Construction Inc. requests your approval to proceed with the above change order to our contract. Please indicate your approval by signing below.

Submitted Date: 24-May-22

Accepted: Sidings Architect

By: _____

Date: _____

Rycon Construction, Inc.

By: _____
Alan Hoppenstead

Proposal Valid for 30 Days

EASLEY & RIVERS

Rycon Construction Inc.
2501 Smallman Street, Suite 100
Pittsburgh, PA 15222

Re: Rycon Project #4013
E&R Project #791502

INVOICE #791502513

DATE *5/6/22*

Easley & Rivers Tickets EWO #34411 - 34413 for building a wall in elevator shaft B.

16 hrs. - Carpenter Foreman @ 66.78	1068.48		
16 hrs. - Carpenter @ 63.61	1,017.76		
			2,086.24
13 Sheets - Fire Sheild Drywall @ 23.76	308.88		
56 pcs. - 6" x 10' x 1 5/8 Stud @ 8.62	482.72		
16 pcs. - 6" x 10' x 1 1/4 Track @ 10.70	171.20		
	962.80		
WV Sales Tax 7%	67.40		1,030.20
			3,116.44
15% Overhead & Profit		467.47	3,583.90
2% B & O Tax		71.68	3,655.58
TOTAL DUE THIS INVOICE.			3,655.58

173 Mathieson Street, Morgantown, WV 26501
Phone: (304)291-6803 - Fax: (304)291-6879
www.EasleyAndRivers.com

PITTS 34400 - 34449

34411 EASLEY & RIVERS, INC.

3600 Morgantown Industrial Park
Morgantown, West Virginia 26501-2348
Telephone: (301) 291-6803

207 Townsend Drive
Monroeville, Pennsylvania 15146
Telephone: (412) 795-4482

EXTRA WORK ORDER

DATE 4/30/2022

You Are Authorized To Proceed With Build 6" wall drywall one side in elevator shaft 3 on East side to deck

FOR RYCON

PROJECT Harrison County General Service Building

JOB NO. 791502

TIME	MATERIALS
____ Hrs. Supt.	Delivery ea:
____ Hrs. Carp. Foreman	6"x10'x16 STUD 56 PC
____ Hrs. Carpenter	6"x10'x1½ TRACK 16 PC
____ Hrs. Taper Foreman	5/8x4'x8' FIRESHEID Drywall 13 PC
____ Hrs. Taper	
____ Hrs. Lather Foreman	
____ Hrs. Lather	
____ Hrs. Plasterer Foreman	
____ Hrs. Plasterer	
____ Hrs. Nozzle Foreman	
____ Hrs. Nozzle Man	
____ Hrs. Laborer Foreman	
____ Hrs. Laborer	
____ Hrs. Hod Carrier	
____ Hrs. Truck & Driver	

Authorized By

Mail To

34412 EASLEY & RIVERS, INC.

3800 Morgantown Industrial Park
Morgantown, West Virginia 26501-2348
Telephone: (301) 291-6803

207 Townsend Drive
Monroeville, Pennsylvania 15146
Telephone: (412) 795-1482

EXTRA WORK ORDER

DATE 5/02/2002

You Are Authorized To Proceed With FRAME 4 6" WALL WITH 1 LAYER OF DRYWALL ON EAST SIDE OF ELEVATOR CORE B FROM GROUND TO ROOF.

FOR RYCON

PROJECT HARRISON County General Service Building

JOB NO. 791502

TIME	MATERIALS
____ Hrs. Supt.	
8 Hrs. Carp. Foreman	2 MEN 8 HOURS EACH
8 Hrs. Carpenter	
____ Hrs. Taper Foreman	
____ Hrs. Taper	
____ Hrs. Lather Foreman	
____ Hrs. Lather	
____ Hrs. Plasterer Foreman	
____ Hrs. Plasterer	
____ Hrs. Nozzle Foreman	
____ Hrs. Nozzle Man	
____ Hrs. Laborer Foreman	
____ Hrs. Laborer	
____ Hrs. Hod Carrier	
____ Hrs. Truck & Driver	

Authorized By [signature]

Mail To

34413 **EASLEY & RIVERS, INC.**

3800 Morgantown Industrial Park
Morgantown, West Virginia 26501-2346
Telephone: (301) 291-6803

207 Townsend Drive
Monroeville, Pennsylvania 15146
Telephone (412) 795-4482

EXTRA WORK ORDER

DATE 5/03/2022

You Are Authorized To Proceed With FRAME & 6" WALL DRYWALL one side in ELEVATOR SHAFT B From Base to Deck

FOR RVcon

PROJECT Hopkins County General Service Building

JOB NO. 791502

TIME	MATERIALS
____ Hrs. Supt.	
8 Hrs. Carp. Foreman	2 MEN
8 Hrs. Carpenter	
____ Hrs. Taper Foreman	
____ Hrs. Taper	
____ Hrs. Labor Foreman	
____ Hrs. Lather	
____ Hrs. Plasterer Foreman	
____ Hrs. Plasterer	
____ Hrs. Nozzle Foreman	
____ Hrs. Nozzle Man	
____ Hrs. Laborer Foreman	
____ Hrs. Laborer	
____ Hrs. Hod Carrier	
____ Hrs. Truck & Dozer	

Authorized By _____

Mail To ____

May 9, 2022

Schindler

Allan Hopperstead
Rycon

Project: Harrion County N7945 Elevator 2 (B)

Please sign the change below (or issue your own change order) for additional charges operate car for carpenters to build fall protection wall in hoistway.

2 days of hoist way construction to install wall to prevent 12" fall hazard due to no handrails. Handrails could not be installed due to low over head.

	Mechanic In Charge	0 straight hours	$0.00	/ hour	$0.00
		0 overtime hours	$0.00	/ hour	$0.00
	Operator	0 straight hours	$0.00	/ hour	$0.00
		0 overtime hours	$0.00	/ hour	$0.00
	Helper	0 straight hours	$0.00	/ hour	$0.00
		0 overtime hours	$0.00	/ hour	$0.00
	Team	16 straight hours	$350.00	/ hour	$5,600.00
		0 overtime hours	$0.00	/ hour	$0.00
Supervisor		0 straight hours	$0.00	/ hour	$0.00
Engineering:		0	$0.00	/ hour	$0.00
Union Expenses:	Zone 1	4 number of days @	$96.40	per day	$385.60
	Zone 2		$0.00		
	Zone 3		$0.00		
Mileage:		0 miles @	$0.00		$0.00
Permits:					$0.00
Overhead:	5%				
Profit:	5%				$299.28
				TOTAL $	6,284.88

Please sign and return one copy of this letter indicating your agreement with the amount quoted and authorizing us to proceed. Please email to david.west@schindler.com. Thank you.

SCHINDLER ELEVATOR CORP.

by: _____

date: _____

Craig Cuccaro/General Manager
Schindler Elevator
230 Bilmar Drive

Field Change Request Form

Schindler

All lines MUST be completed; please include signature and printed name of approving party

1. (G.O.) Number N7945 Job Name Harrison County Date: 5-9-22
2. Customer Order # for this Work
3. General Contractor Ryan
4. Work Scope (Reason for field change):
   - ☐ Remobilization due to
   - ☑ Operator time at GC's request. Explain reason: To Have Carpenters Build wall in hoistway.
   - ☐ Inadequate site conditions (generator, temporary pump, add support, etc.)
     Explain:
   - ☐ Expedite installation
   - ☐ Scope change (install pit ladder, signage, pre-inspections, add security, etc.)
     Explain:
   - ☐ Temporary Use (Inspection, monthly fees, callbacks)
   - ☐ Reinspection due to failure by others (Attach copy of inspection report)
   - ☐ Stolen or damaged material. Describe:
5. Hourly Billing Rate $ Std / OT Hrs 16 (Team) Man
6. Total hours: Permits $ Expenses $
7. Total Price Add $

GC Approval (Print) Dennis James Title: Superintendent

GC Approval Signature Dennis James Date: 5-9-22

Schindler Rep: (Print)

Schindler Rep: (Signature) Date:

By signing above, the customer's representative is confirming he/she has the authority to approve the additional cost associated with this extra work.

Reg 70000 (Rev. 01/09) White – GC Copy [illegible] Folder Copy

RYCON
Construction Inc.
Employee-Owned. Client-Driven.

2501 Smallman Street, Suite 100
Pittsburgh, PA 15222
412-392-2525
www.ryconinc.com

June 8, 2022

Mr. Glenn Savage
Silling Architects
405 Capitol Street, Upper Atrium
Charleston, WV 25301

RE: Harrison County GSB
Change Order Request # 39
Add power and data to the first floor entry cubicle

Dear Mr. Savage

RYCON Construction, Inc is please to submit a proposal in the amount of $ 8,738 to add power and data to the first floor lobby entry cubicle.

An itemized cost breakdown of this RFCO accompanies this letter.

We ask that you give us a written response to this proposal within **five days** of receipt of this correspondence. Please advise how you wish to proceed. Thank you.

Sincerely,

Alan Hopperstead
Senior Project Manager

Attachment: Rycon Proposal

cc: Matt Highlands
Dennis James
Tom Hacke
File

RYCON
Construction Inc.

Rycon Construction, Inc.
2525 Liberty Avenue
Pittsburgh, PA 15222
412-392-2525

PROJECT: Harrison County GSB

Request For Change Order (RFCO): Project Job # 4013 RFCO # 39

QUOTATION: Add power and data to the first floor entry cubicle.

Subcontractor	Notes	Subcontractor Cost
Tri County	Add power and data to the first floor entry cubicle.	$ 6,753
E&R	Carpenter time to repair/rework ceilings from eletrical/data work	$ 950
Note	Does not include repair to the wall tile or floor tile. Repairs will be completed on a T&M basis.	
	Subtotals:	$ 7,703

Plus	1.000% of	$ -	
Plus	0.10% of	$ -	
Plus	10.00% of	$ -	
Plus	2.00% of	$ -	

Subcontractor Cost	$ 7,703
P&P Bond	$ 77
Bldg Risk Ins	$ 8
Overhead & Profit	$ 779
B&O Tax	$ 171
TOTAL FOR THIS RFCO	8,738

TIME EXTENSION REQUEST TO CONTRACT: TBD Calendar Days

Rycon Construction Inc. requests your approval to proceed with the above change order to our contract. Please indicate your approval by signing below.

Submitted Date: 24-May-22

Accepted: Stillings Architect

By: _____

Date: _____

Rycon Construction, Inc.

By: _____
Alan Hoppenstead

Proposal Valid for 30 Days

#31

TRI-COUNTY ELECTRIC

7-Jun-22

HARRISON COUNTY GSB
FILE:FTCE\77807651\RFP20.XLS

DESCRIPTION	QTY	MAT. UNIT	MAT. TOTAL	LABOR UNIT	LABOR TOTAL
POWER & DATA FOR 1ST FLOOR ENTRY CUBICAL					
4" SQ BOX	2	$ 1.68	$ 3.36	0.350	0.70
BLANK COVER	1	$ 0.54	$ 0.54	0.060	0.06
TILE RING	1	$ 1.50	$ 1.50	0.060	0.06
3/4" EMT CONDUIT	140	$ 1.14	$ 159.60	0.060	8.40
3/4" EMT CONN	6	$ 0.40	$ 2.40	0.090	0.54
3/4" EMT CPLG	14	$ 0.42	$ 5.88	0.060	0.84
3/4" EMT STRUT STRAP	21	$ 1.21	$ 25.41	0.080	1.68
2' SR. STRUT	14	$ 3.15	$ 44.10	0.250	3.50
BEAM CLAMPS/HARDWARE	28	$ 2.95	$ 82.60	0.280	7.84
#12 THHN WIRE	420	$ 0.19	$ 79.83	0.006	2.52
12/2C MC CABLE	15	$ -	$ -	0.100	1.50
MC CONN	2	$ 0.23	$ 0.46	0.130	0.26
DUPLEX RECEPTACLE	2	$ 3.50	$ 7.00	0.350	0.70
DOUBLE DUPLEX COVER	1	$ 1.27	$ 1.27	0.080	0.08
SPARE 1P-20A BREAKER TERM	1	$ -	$ -	0.500	0.50
FINISHED CEILING SPACE WORK	1	$ -	$ -	4.000	4.00
DRILLING CABINETRY & TILE WALL	1	$ 25.00	$ 25.00	2.000	2.00
FISHING WALL & CABINETRY	1	$ -	$ -	2.750	2.75
DATA PURCHASE/INSTALL/COORD	1	$ 2,000.00	$ 2,000.00	2.000	2.00
CAT6A	4	$ -	$ -	0.000	0.00
RJ45 CAT6A TERM	8	$ -	$ -	0.000	0.00
TESTING	4	$ -	$ -	0.000	0.00
4" SQ BOX	2	$ 1.68	$ 3.36	0.300	0.60
BLANK COVER	2	$ 0.54	$ 1.08	0.060	0.12
TILE RING	2	$ 1.50	$ 3.00	0.060	0.12
1" STEEL FLEX	10	$ -	$ -	0.060	0.60
1" FLEX CONN	2	$ -	$ -	0.230	0.46
3/4" EMT CONDUIT	20	$ 1.14	$ 22.80	0.060	1.20
3/4" EMT CONN	2	$ 0.40	$ 0.80	0.090	0.18
3/4" EMT CPLG	2	$ 0.42	$ 0.84	0.060	0.12
3/4" EMT STRUT STRAP	4	$ 1.21	$ 4.84	0.080	0.32
3/4" PLASTIC BUSHING	2	$ 0.09	$ 0.18	0.190	0.38
2' SR. STRUT	1	$ 3.15	$ 3.15	0.250	0.25
BEAM CLAMPS/HARDWARE	2	$ 2.95	$ 5.90	0.280	0.56
FISHING WALL & CABINETRY	1	$ -	$ -	2.750	2.75
SUPERVISION	1	$ -	$ -	2.000	2.00

* Power installed in Conduit to Electric Closet 112.

MATERIAL TOTAL		$ 2,484.90
6% SALES TAX		$ 149.09
LABOR (HRS)	49.57	
LABOR @ 63 PER HR		$ 3,122.91
2% B&O TAX		$ 115.14
15% OV/PROFIT		$ 880.81
GRAND TOTAL		$ 6,752.85

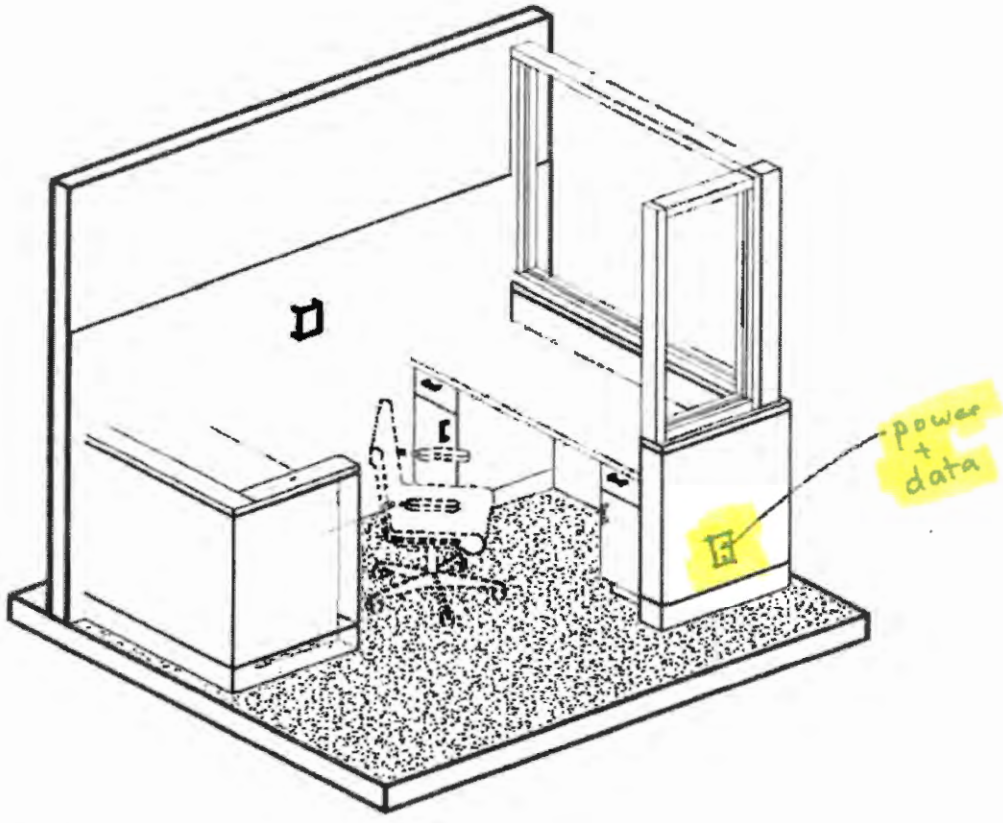

7
A1.9

LOBBY 101 - AXON



HARRISON COUNTY COURT HOUSE

Harrison County Commission

LAURA PYSZ
COUNTY ADMINISTRATOR
301 WEST MAIN STREET
CLARKSBURG, WEST VIRGINIA 26301
304-624-8500
FAX 304-624-8673

11

08/15/2022

Jennifer Hughes, Director, Design and Creative Placemaking
National Endowment of the Arts (NEA)
400 7th Street, SW, Washington, DC 20506

RE: NEA - Our Town - City of Clarksburg Creative Placemaking Cultural Planning Initiative

Dear Jennifer Hughes:

The Harrison County Commission would like to express our utmost support for the *City of Clarksburg Creative Placemaking Cultural Planning Initiative* project set forth by the City of Clarksburg through the Our Town grant program of the National Endowment of the Arts (NEA). The grant tracking number is GRANT13687301. This initiative seeks to engage in community planning sessions to develop a cultural plan enhanced by creatives to include creative asset mapping and public art planning thereby creating a framework for the integration of arts and culture for future local community and economic development to realize systems change.

We are excited to see how community and artistic visionaries will come together to restore a sense of vibrancy in the City of Clarksburg. The Harrison County Commission is pleased to offer support to this project. The arts are a powerful driver for community and economic development. Through the partnership between the City of Clarksburg and the Cultural Foundation of Harrison County, this project presents a unique opportunity to jumpstart and reinvigorate planning where it's needed most in the areas of our city that are unresponsive to the economic, social, and physical needs of residents and visitors.

If there are any questions or concerns in relation to our support of this proposal, please contact Laura Pysz at 304-624-8500.

Sincerely,

Laura Pysz, County Administrator

ORIGINAL

Sun Valley Public Service District

Regular Board Meeting

Tuesday, July 12, 2022

With due notice published and a quorum present, Chairman Dale called the meeting to order: ROLL CALL

Present	Employees	Also Present
Gregg Dale	Kevin Short	Logan Alastanos
Connor Thompson		
Sandra Patterson		

1. **Approval of Minutes**
Sandra Patterson made a motion to approve the minutes for Tuesday, June 14, 2022, as read. Connor Thompson seconded the motion. All in favor, none opposed and none abstained.

2. **Signing of Checks**
Sandra Patterson made a motion to approve the Checks Signed Document dated 6/14/22 through 7/12/22. Connor Thompson seconded the motion. All in favor, none opposed and none abstained.

3. **2019 Water Project**
Logan said that he met with Kevin on Thursday of last week and did a walk through at the tank site and looked at some of the hydraulics. Logan said the new tank over flow is higher and that accounts for the box inside the existing tank. Logan said they found that when they are pumping the full 800 gallons a minute there is a little bit of a head loss of about a foot and a half compared to the telemetry. Kevin and the Board continued discussion regarding items of the tank contract that needs to be completed.

4. **Manager's Report**

A. Kevin provided the Board with a copy of the agreement with Bennett & Dobbins PLLC for Water and Sewer for the year ended June 30, 2022. They will prepare the annual report of SVPSD – Water and Sewer, which comprise the annual Balance Sheet, Income Statement, cash flows, and related schedules for the year ended June 30, 2022, and perform a compilation engagement with respect to those financial statements. Kevin said the cost for this will be $4,000.00. After discussion, **Sandra Patterson made a motion to accept the agreement with Bennett & Dobbins, PLLC to do SVPSD's Water & Sewer financial statements for year ended June 30, 2022. Connor Thompson seconded the motion. All in favor, none opposed and none abstained.**

B. Kevin provided the Board with a copy of the agreement with Bennett & Dobbins, PLLC to prepare the financial statements for SVPSD, which comprise the annual combined and combining statements of net position, revenues, expenses and changes in net position for the year ended June 30, 2022, related notes to the financial statements, supplementary information and perform a compilation engagement with respect to those financial

statements. Kevin said the cost for this will also be $4,000.00. **Sandra Patterson made a motion to accept the agreement with Bennett & Dobbins, PLLC to do SVPSD's annual combined and combining statements of net position, revenues, expenses and changes in net position for the year ended June 30, 2022. Connor Thompson seconded the motion. All in favor, none opposed and none abstained.**

C. Kevin provided the Board with copies of the Water and Sewer Bond Payment Schedule and advised the Board that all of the Bond payments are paid to date.

D. Kevin provided the Board with a copy of the Aged Trial Balance sheet and informed them that it was printed before charges were created on June 27, 2022 and discussed.

E. Kevin provided the Board with a copy of the Water Loss Report for July through June, 2022, with a water loss of 37.50% for the month of June, and with a year to date adjusted water loss of 39.26%. Kevin and the Board discussed in detail.

F. Kevin provided the Board with a copy of the Water and Sewer Spreadsheets that show the total amount billed compared to the total amount purchased for the month of June, 2022 and the total outstanding when the disconnects are mailed each month. Kevin and the Board discussed this in detail.

G. Kevin provided the Board with copies of the Vendor Invoice Report for Water & Sewer that is outstanding as of 6/30/22 and discussed.

H. Kevin provided the Board with a copy of the August, 2022 calendar and discussed.

5. <u>Employee Issues:</u>

Sandra Patterson made a motion to go into executive session to discuss employee issues. Connor Thompson seconded the motion. All in favor, none opposed and none abstained. Gregg Dale announced that the meeting was back in session.

1. **Sandra Patterson made a motion to give Zachary Hayes a pay raise of $1.00 on the hour, with his hourly wage now being $13.50 and with the raise it will be $14.50 an hour. This pay raise will be effective with the start of the next pay cycle on 7/10/22. Connor Thompson seconded the motion. All in favor, none opposed and none abstained.**
2. **Sandra Patterson made a motion to give Zachary Barnett a pay raise of $1.00 on the hour, with his hourly wage now being $17.75 and with the raise it will be $18.75 an bour. This pay raise will be effective with the start of the next pay cycle on 7/10/22. Connor Thompson seconded the motion. All in favor, none opposed and none abstained.**
3. **Sandra Patterson made a motion to give Cathy Sparks a 3 ½% pay raise of $.65 on the hour, with her hourly wage now being $18.63 and with the raise it will be $19.28 an hour. This pay raise will be effective with the start of the next pay cycle on 7/10/22. Connor Thompson seconded the motion. All in favor, none opposed and none abstained.**
4. **Sandra Patterson made a motion to give Joyce Amos a 3 ½% pay raise of $.51 on the hour. Her hourly wage now is $14.50 and with the raise it will be $15.01 an hour. This pay raise will be effective with the start of the next pay cycle on 7/10/22. Connor Thompson seconded the motion. All in favor, none opposed and none abstained.**

6. <u>Next Board Meeting</u>

Sandra Patterson announced that the next Board meeting will be August 9, 2022.

7. **Adjournment**

There being no further business, **Connor Thompson made a motion to adjourn the meeting. Sandra Patterson seconded the motion. All in favor, none opposed and none abstained.**

Chairman

Treasurer

Secretary

aja

C-2

V E N D O R I N V O I C E R E P O R T

** OPEN INVOICES ** DUE DATE: 7/31/22 ** BANK:ALL **

** BEGINNING DATE: 1/01/62 - ENDING DATE: 7/31/22 **

** PAY-TO VENDOR **

ALL FUNDS

VENDOR#	VENDOR NAME / DATE	TRAN#	TYPE	REFERENCE	DESCRIPTION	I/P AMOUNT	I/P BALANCE
1,055	CHASE CARDMEMBER SERVICE						
	5/17/22	212652	401	7547-GLOT-CR	NEW TIRES-KEVIN'S TRUCK UN 2&FIN CHAR-CR	1,088.72	1,088.72
	6/15/22	214502	401	7547-SAMS18	OFFICE SUPPLIES	89.54	89.54
	6/15/22	214503	401	7547-INT17	INTEREST CHARGES	22.40	22.40
	7/13/22	216047	401	7547-SOS1	JOYCE NOTARY RENEWAL	52.00	52.00
	7/13/22	216048	401	7547-TEAMV1	TEAM VIEWER YEARLY SUBSCRIPTION	374.80	374.80
	7/13/22	216049	401	7547-ADOBE1	ADOBE ACROBAT YEARLY SUBSCRIPTION	190.67	190.67
	7/13/22	216050	401	7547-INT18	INTEREST CHARGES	22.58	22.58
						1,840.71*	1,840.71*
1,250	BENNETT & DOBBINS PLLC						
	4/16/21	190074	401	24848-SW	3RD QTR FY 2014-2015 ACCOUNTING WORK-SW	417.90	417.90
	4/16/21	190075	401	25095-SW	4TH QTR FY 2014-2015 ACCOUNTING WORK-SW	900.00	900.00
	4/16/21	190076	401	25121-SW	1ST QTR FY 2015-2016 ACCOUNTING WORK-SW	900.00	900.00
	4/16/21	190077	401	25194-SW	2ND QTR FY 2015-2016 ACCOUNTING WORK-SW	900.00	900.00
	4/16/21	190078	401	25745-SW	3RD QTR FY 2015-2016 ACCOUNTING WORK-SW	900.00	900.00
	4/16/21	190079	401	26019-SW	4th QTR FY 2015-2016 ACCOUNTING WORK-SW	900.00	900.00
	4/16/21	190080	401	26065-SW	1ST QTR FY 2016-2017 ACCOUNTING WORK-SW	900.00	900.00
	4/16/21	190081	401	26383-SW	2ND QTR FY 2016-2017 ACCOUNTING WORK-SW	900.00	900.00
	4/16/21	190082	401	26716-SW	3RD QTR FY 2016-2017 ACCOUNTING WORK-SW	900.00	900.00
	4/16/21	190083	401	26890-SW	4TH QTR FY 2016-2017 ACCOUNTING WORK-SW	900.00	900.00
	4/16/21	190084	401	26982-SW	1ST QTR FY 2017-2018 ACCOUNTING WORK-SW	900.00	900.00
	4/16/21	190085	401	27697-SW	2ND&3RD QTR FY 2017-2018 ACCTING WORK-SW	1,500.00	1,500.00
	4/16/21	190094	401	27856-SW	4TH QTR FY 2017-2018 ACCOUNTING WORK-SW	900.00	900.00
	4/16/21	190095	401	28079-SW	1ST&2ND QTR FY 2018-2019 ACCTING WORK-SW	1,800.00	1,800.00
	4/16/21	190096	401	28571-SW	3RD QTR FY 2018-2019 ACCOUNTING WORK-SW	900.00	900.00
	4/16/21	190097	401	28836-SW	ACCOUNTING SERVICES AGR HEP&SVPSD SW POR	750.00	750.00
	4/16/21	190098	401	29029-SW	4TH QTR FY 2018-2019 ACCOUNTING WORK-SW	900.00	900.00
	4/16/21	190099	401	29953-WA	ACCOUNTING WORK-RFP FOR AUDITORS-WA	210.00	210.00
	4/16/21	190100	401	29953-SW	ACCOUNTING WORK-RFP FOR AUDITORS-SW	90.00	90.00
	4/16/21	190101	401	30033-WA	ACCOUNTING WORK FY 2019-2020-WATER	6,300.00	6,300.00
	4/16/21	190102	401	30033-SW	ACCOUNTING WORK FY 2019-2020-SEWER	2,700.00	2,700.00
	4/16/21	190103	401	30516	ACCOUNTING WORK COVID 19 SW RATES	825.00	825.00
	1/11/22	204167	401	31069	ACCOUNTING WORK FY 2020-2021 PSC & FINAN	8,000.00	8,000.00
	5/05/22	212064	401	2022-631	ACCOUNTING-FY 2022-2023 BUDGETS&SAM.GOV	750.00	750.00
	7/13/22	216045	401	2022-786	ACCOUNTING SERVICE FOR RATE INCREASES	3,715.00	3,715.00
						38,757.90*	38,757.90*
3,300	CLARKSBURG WATER BOARD						
	7/07/22	215761	401	49001 7/22	WATER PURCHASED FOR DAVISSON RUN	22,572.60	22,572.60
						22,572.60*	22,572.60*
5,900	CORE & MAIN						
	7/07/22	215759	401	R081693	100' OF 2" PIPE-STOCK-SV & HEP SPLIT	190.00	190.00
	7/13/22	216038	401	R134640	2 HYMAX FOR STOCK	333.00	333.00
	7/13/22	216039	401	R146087	SUPS-J LENHART 55200-00 SEWER ODOR COMPL	94.79	94.79
	7/13/22	216040	401	R148556	LOCKS FOR METERS	43.00	43.00
						660.79*	660.79*
8,800	PUBLIC SERVICE COMMISSION						
	7/14/21	194941	401	12153	INTRASTATE REVENUE ASSESSMENT 2020	4,421.28	4,421.28
	7/07/22	215757	401	12822	INTRASTATE REVENUE ASSESSMENT 2021	3,489.74	3,489.74
						7,911.02*	7,911.02*
9,351	RONALD LANE INC.						
	4/23/21	190361	401	31520	8TH REIMBURSEMENT LOT 1 SEWER	229.26	229.26

V E N D O R I N V O I C E R E P O R T

** OPEN INVOICES ** DUE DATE: 7/31/22 ** BANK:ALL **

** BEGINNING DATE: 1/01/62 - ENDING DATE: 7/31/22 **

** PAY-TO VENDOR **

ALL FUNDS

VENDOR#	VENDOR NAME / DATE	TRAN#	TYPE	REFERENCE	DESCRIPTION	I/P AMOUNT	I/P BALANCE
9,351	RONALD LANE INC.						
	4/23/21	190362	401	31520-2	8TH REIMBURSEMENT LOT 5 SEWER	229.26	229.26
	4/23/21	190363	401	31520-3	8TH REIMBURSEMENT LOT 10 SEWER	229.26	229.26
	4/23/21	190364	401	91520-1	9TH REIMBURSEMENT LOT 1 SEWER	229.26	229.26
	4/23/21	190365	401	91520-2	9TH REIMBURSEMENT LOT 5 SEWER	229.26	229.26
	4/23/21	190366	401	91520-3	9TH REIMBURSEMENT LOT 10 SEWER	229.26	229.26
	4/23/21	190367	401	31521-1	10TH REIMBURSEMENT LOT 1 SEWER	229.26	229.26
	4/23/21	190368	401	31521-2	10TH REIMBURSEMENT LOT 5 SEWER	229.26	229.26
	4/23/21	190369	401	31521-3	10TH REIMBURSEMENT LOT 10 SEWER	229.26	229.26
						2,063.34*	2,063.34*
10,900	CITCO WATER						
	6/30/22	215480	401	S100183390.2	6" BORE SUPS - WOLFE SUMMIT SLIP	3,288.00	3,288.00
						3,288.00*	3,288.00*
11,450	THE THRASHER GROUP, INC.						
	1/11/22	204183	401	1021202	ASSETT RETIREMENT OBLIGATION-PSC REPORTS	3,480.00	3,480.00
						3,480.00*	3,480.00*
					VENDOR INVOICES	80,574.36**	80,574.36**

	ACCOUNT #	TITLE	QUAN	AMOUNTS	QUAN	BALANCES
B	80 601 000 00	PURCHASED WATER	1	22,572.60	1	22,572.60
B	80 651 100 00	MAINTENANCE OF MAINS	2	428.00	2	428.00
B	80 651 175 00	MAINTENANCE OF MAINS	1	3,288.00	1	3,288.00
B	80 653 000 00	MAINTENANCE OF METERS	1	43.00	1	43.00
B	80 675 200 00	HEPZIBAH MAINTENANCE HELP	1	95.00	1	95.00
B	80 921 100 00	OFFICE SUPPLIES & OTHER EXPENS	6	526.40	6	526.40
B	80 923 400 00	OUTSIDE SERVICES-ACCOUNTING	6	16,115.00	6	16,115.00
B	80 928 000 00	REGULATORY COMMISSION EXPENSE	2	5,537.72	2	5,537.72
B	80 933 000 00	TRANSPORTATION	1	762.10	1	762.10
	FUND# 80	WATER FUND	21	49,367.82	21	49,367.82
B	81 271 300 00	5.5 SEWER LINE EXT CONTRIBUT	9	2,063.34	9	2,063.34
B	81 703 000 00	SUPPLIES & EXPENSES	1	94.79	1	94.79
B	81 793 000 00	GENERAL & MISC SUPPLIES & EXP	6	225.59	6	225.59
B	81 795 100 00	OUTSIDE SERVICES-ACCOUNTING	24	26,122.90	24	26,122.90
B	81 797 000 00	REGULATORY COMMISSION EXPENSES	2	2,373.30	2	2,373.30
B	81 811 000 00	TRANSPORTATION EXPENSE	1	326.62	1	326.62
	FUND# 81	SEWER FUND	43	31,206.54	43	31,206.54
		ALL FUNDS	64	80,574.36	64	80,574.36

July 20, 2022

Harrison County Commission T1 P1 F 28
301 W Main St
Clarksburg WV 26301-2975

Re: Company Update

Dear Valued Customer:

Thank you for your continued relationship with MCM Business Systems.

This letter is to officially inform you that we have recently updated our company name and we will be co-branding the MCM name to include Visual Edge IT™. This change came into effect on July 1, 2022 .

You can rest assured that the way we are doing business today is stronger than ever before due to this evolution. You will continue to work with the same people (such as Joey Childers and Michelle Clark) in the same way as you do today and be able to benefit from an extensive network of experts and portfolio of products and services.

This rebranding better projects who we are and what we bring to our customers. We are focused on print/copy solutions as we have always been, plus a wide array of IT solutions which will add considerable value to our relationship.

As Visual Edge IT™, we specialize in managed IT services and security, cloud computing, and print/copy solutions for businesses including remote office locations. Our services include 24/7 remote monitoring and administration of networks, service desk, and data backup and restore to improve business processes and productivity. Backed by more than 20-years of technology service and a national network of expert engineers, we are uniquely positioned to support all your business technology needs.

Please reach out to your local team if you have questions, require any additional information, or feel free to email us at bbingham@visualedgeit.com.

We appreciate the partnership we have with you and look forward to continuing leveraging technology to support your organization's continued success!

Sincerely,

Roger Lehosit
Founder, MCM Business Systems