Wednesday August 31, 2022

9:00 A.M.

The Harrison County Courthouse will be opened with limited seating at the County Commission meeting. However, you may join and listen via Zoom Conference Call by the following steps. Public participation will be allowed during public comment period and/or scheduled appointments.

Join Zoom Meeting

****

https://us02web.zoom.us/j/7628160712

Dial: 1-646-568-7788

Meeting ID: 762 816 0712

Passcode: 270967

Appointments:

9:00 A.M. --- Call to Order --- Invocation --- Pledge of Allegiance

9:05 A.M. --- Opening of Bids for Regional Farm Recreation Facility

9:10 A.M. --- Mike Perri --- State Treasurer

9:20 A.M. --- Funding Request --- Johnstown CEOS --- Priscilla Suan

9:30 A.M. --- Funding Request --- Harrison County Fire Chiefs Association --- John Elko

9:40 A.M. --- Funding Request --- Literacy Volunteers of Harrison County --- Melissa Sinisi

NEW BUSINESS – Action Items for Consideration or Approval:

1. Public Comment Period
2. Consent Agenda
3. Payroll Change Notices:
   - A. W.J. Cunningham --- Resignation --- Effective 09-04-2022 --- L.E.
   - B. Alan Long --- Hired --- Effective 08-31-2022 --- L.E.
   - C. Joshua Webber --- Resignation --- Effective 08-23-2022 --- Maintenance
   - D. Elijah Floyd --- Resignation --- Effective 08-23-2022 --- Maintenance
   - E. Bobbi Jo Gray --- Resignation --- Effective 08-31-2022 --- Process
   - F. Gary Dennis Burner --- Wage Increase Interim Period --- Effective 08-31-2022 --- Animal Control
   - G. Roberta Barnett --- Retirement --- Effective 09-09-2022 --- Planning Department
   - H. Andrea Derossett --- New Hire --- Effective 09-01-2022 --- Assessor
   - I. Joseph Barberio --- New Hire --- Effective 09-09-2022 --- Assessor
   - J. Rick Watson --- Retirement --- Effective 08-31-2022 --- Assessor
4. Minutes and /or Amended Minutes of Previous Meeting:
   - A. Regular Meeting Minutes 08-03-2022
   - B. Special Meeting Minutes 08-08-2022
   - C. Regular Meeting Minutes 08-10-2022
   - D. Regular Meeting Minutes 08-17-2022

5. Requisitions --- Purchase Orders --- Invoices
    A. Vendor Requisition List of Payments
6. Exonerations --- Corrective Tickets --- Joint Property Application:
    A. Exonerations --- See Exhibit A
    B. Corrective Tickets --- See Exhibit B
7. Consideration of approval of a Project Fund Requisition for the payment of costs associated with the project to be financed from proceeds of the Series 2019 Bonds issued for the Charles Pointe Economic Opportunity Development District, Series 2021 A & B (Development District No. 3 White Oaks Project No. 2) & Series 2008 A (Charles Pointe Project No. 2 – North Land Bay Improvements:
    A. Requisition for Payment No. 35 --- Genesis Partners, Limited Partnership $ 320,000.00
    B. Requisition for Payment No. (08/31/22) --- Jackson Kelly, PLLC $118.00
    C. Requisition for Payment No. 55 --- MuniCap, Inc. $2,125.00
8. GSA Executive Session (Potential Executive Session Pursuant to 6-9A-4(b)(9) to Consider Matters Involving or Affecting the Purchase, Sale or Lease of Property, Advance Construction Planning, the investment of Public Funds or Other Matters Involving Commercial Competition, which if Made Public, Might Adversely Affect the Financial or Other Interest of The County) Attorney – Client Privilege
9. Review – Discuss – Consider Change Order #9 for GSA
10. Consideration of Approval of Project Fund Requisitions for the payment of costs associated with the General Services Administration Building Project to be financed from proceeds of the Series 2020 Bonds issued for the Harrison County Building Commission
    A. Requisition Number #74 --- Rycon Construction $46,775.00
11. Review – Discuss – Consider Permission to Travel --- Jim Copenhaver --- WV E911 Council Next-Gen E911 Committee Meeting --- Flatwoods --- 09-21-2022 – 09-22-2022
12. Review – Discuss – Consider Permission to Travel --- Doug Comer --- WV RPA Annual Conference Glade Springs --- 10-11-2022 – 10-13-2022
13. Review - Discuss - Consider Proposed Opioid Settlement Agreement (May Require Executive Session - Attorney Client Privilege).
14. Administrator's Report
15. Commissioner Comments – Questions

CONSENT AGENDA - (NOTE: Items May Require Discussion, Review and/or Action)

A. Weekly Fiduciary Report from the County Clerk
    1. 08-10-2022 – 08-16-2022
    2. 08-17-2022 – 08-23-2022
B. Monthly Fiduciary Commission Settlements: (NONE)
C. Monthly Minutes/Financial Information from Various Boards, Committees and Public Service
    1. Enlarged Hepzibah PSD --- Meeting Minutes 07-11-2022

4. Sun Valley PSD --- Financials 06-2022
5. Bingamon PSD --- Meeting Minutes 07-18-2022
6. Sun Valley PSD --- Rates, Rules, and Regulations for Furnishing Water
7. Sun Valley PSD --- Rates, Rules, and Regulations for Furnishing Sewerage and Sewerage Disposal Service
8. East View PSD --- Meeting Minutes 08-09-2022
9. Shinnston VFD --- Form 990 --- 07-21—06-22
10. Greater Harrison County PSD --- Meeting Minutes 07-21-2022
11. Greater Harrison County PSD --- Special Meeting 07-28-2022

D. ARPA Allocation for the Town of Anmoore

E. Harrison County 4-H Invitation to Empty Bowls Soup-er Luncheon

F. Harrison County 4-H Leaders Association Update

TABLED ITEMS - - Items May Require Discussion and /or Approval

T-1. Election Workers Pay Raises (05-18-2022)

T-2. Changes to Employee Handbook Made by County Attorney (06-08-2022).

T-3.Potential Purchase of Parking Lots Adjacent to courthouse (08-03-2022)

9:20 AM

HARRISON COUNTY COMMISSION
SPECIAL FUNDING REQUEST

Thank you for the opportunity to suport your project. Please complete this application and return it to the Harison County Commission, 301 West Moin Street, Clarksburg, WV 26301 by fax or email: Facsimile: 304-624-8673; Email: wparker@harrisoncountywv.com; Question: 304-624-8500
Funding is derived from the State of West Virginia/Video Lottery Funding.

Date of Request: July 13, 2022

Organization Name: Johnstown CEOS (Community Educational Outreach Service)

Name and Title of Requester: Priscilla Swan, Treasurer

Mailing Address of Organization and Responsible Person:
143 Post Farm Rd. Lost Creek, WV 26385
If approved, this is where the check will be sent

Telephone: 304-622-6223 Fax: _____ E-mail: pswan.12345@gmail.com

FEIN# _____ Is your organization an IRS 501(c) 3 not-for-profit? (●) Y ( ) N
If yes, attach IRS status Letter
If no, please explain: _____

TOTAL Cost of Project/Activity: $ 9,000.00

Dollar Amount REQUESTED - Grant: $ 1,500.00 Loan: $ _____

Was project funded previously by HCC? Y (●) N ( ) If so, when 2021 ; how much: $ _____

Have you previously received funds from the Harrison County Commisson: Y N
If Yes, how much? If funded multi years - list by fiscal year?
When: 2020 ; how much: $ 1,000
When: 2019 ; how much: $ 1,000
When: 2018 ; how much: $ 1,000

Purpose of request (one sentence): This will help us pay for advertising + entertainment.

If for a fair/festival/event, give dates and location: Date: 9/10/22 Location: Johnstown

Describe the proposed activities with dollar amounts to be funded by this request:

WV Radio Corp	800.00
Sign Maker	311.36
DJ's Country	400.00

Are your financial statements audited by an outside accounting firm? ( ) Y (●) N
If Yes, by whom:

Do you plan to recognize the Harrison County Commission 's contribution? (●) Y ( ) N
If Yes, how? On our Fair flyer

(Name of Applicant) Johnstown CEOS agrees that in the event of any embezzlement, theft or misappropriation of funds or property of any kind or nature or in the event of any alleged embezzlement theft or misappropriation of funds or property of any kind or nature from (Name of Applicant) Johnstown CEOS, the recipient of funding from the Harrison County Commission hereunder, that (Name of Applicant) Johnstown CEOS shall immediately report said incident(s) to the proper police agency having jurisdiction over such matters and, further, shall immediately report said incident(s) along with a writing describing said incident(s) have been reported to the police agency having jurisdiction, to the Harrison County Commission. Further, that (Name of Applicant) Johnstown CEOS agrees to fully cooperate with the police and the Prosecuting Attorney's Office toward the successful prosecution of such activity.

Please attach to this Request the following:

1. IRS Letter of Tax Exemption, if you have one
2. Current List of Board of Directors with addresses
3. List other contributors with dollar amounts to your project/event
4. Balance sheet and income statement for immediate prior year, or reason why no available
5. Any additional information about your organization

FINAL REPORT REQUIRED: If approved, you agree to submit within 15 days of the event or end of project the "Final Report for Special Funding Request", on page 3 of this application OR a detailed statement of revenues and expenditures.

On behalf of the Applicant, I certify that all required information in this request is attached and correct, that we agree to the above terms, and that a Final Report (on attached Final Report or by Internal Financial Report detailing substantially same information) will be submitted within 15 days of the end of the project/event.

Signature and Title of Applicant Priscilla Swan, Treasurer **Date** 7-13-22

For Official Use:

This funding request is: APPROVED NOT APPROVED TABLED

Amount Approved: $_____ Paid Date: _____

With the following notations:

_____

_____

_____

Action taken at Harrison County Commission meeting on: _____

9:30 AM

HARRISON COUNTY COMMISSION
SPECIAL FUNDING REQUEST

Thank you for the opportunity to suport your project. Please complete this application and return it to the Harison County Commission, 301 West Main Street, Clarksburg, WV 26301 by fax or email: Facsimile: 304-624-8673; Email: wparker@harrisoncountywv.com; Question: 304-624-8500
Funding is derived from the Stote of West Virginia/Video Lottery Funding.

Date of Request: 8/10/2022

Organization Name: Harrison County Fire Chiefs Association

Name and Title of Requester: John Elko, President of HCFCA

Mailing Address of Organization and Responsible Person:

If approved, this is where the check will be sent

Telephone: 304-677-1015 Fax: E-mail: jelk15@frontier.com

FEIN# Is your organization an IRS 501(c) 3 not-for-profit? ○ Y ◉ N
If yes, attach IRS Status Letter
If no, please *explain:* *Association is in process of obtaining proper FEIN.*
But each FD has their paperwork.

TOTAL Cost of Project/Activity: $ 165,536.96

Dollar Amount REQUESTED - Grant: $ 80,536.96 Loan: $

Was project funded previously by HCC? Y ○ N ◉ If so, when ; how much: $

Have you previously received funds from the Harrison County Commisson: Y N
If Yes, how much? If funded multi years - list by fiscal year?
When: ; how much: $
When: ; how much: $
When: ; how much: $

Purpose of request (one sentence): ~~Purchase of 8 LUCAS devices for designated VFD's in county.~~

If for a fair/festival/event, give dates and location: Date: Location:

Describe the proposed activities with dollar amounts to be funded by this request:
$75,000 from state grant, $10,000 from Fire Chiefs Assn. and balance from Commission.

Are your financial statements audited by an outside accounting firm? ○ Y ◉ N
If Yes, by whom:

Do you plan to recognize the Harrison County Commission 's contribution? ◉ Y ○ N
If Yes, how?

(Name of Applicant) Harrison County Fire Chiefs Assn. agrees that in the event of any embezzlement, theft or misappropriation of funds or property of any kind or nature or in the event of any alleged embezzlement theft or misappropriation of funds or property of any kind or nature from (Name of Applicant) Harrison County Fire Chiefs Assn., the recipient of funding from the Harrison County Commission hereunder, that (Name of Applicant) Harrison County Fire Chiefs Assn. shall immediately report said incident(s) to the proper police agency having jurisdiction over such matters and, further, shall immediately report said incident(s) along with a writing describing said incident(s) have been reported to the police agency having jurisdiction, to the Harrison County Commission. Further, that (Name of Applicant) Harrison County Fire Chiefs Assn. agrees to fully cooperate with the police and the Prosecuting Attorney's Office toward the successful prosecution of such activity.

Please attach to this Request the following:

1. IRS Letter of Tax Exemption, if you have one
2. Current List of Board of Directors with addresses
3. List other contributors with dollar amounts to your project/event
4. Balance sheet and income statement for immediate prior year, or reason why no available
5. Any additional information about your organization

FINAL REPORT REQUIRED: If approved, you agree to submit within 15 days of the event or end of project the "Final Report for Special Funding Request", on page 3 of this application OR a detailed statement of revenues and expenditures.

On behalf of the Applicant, I certify that all required information in this request is attached and correct, that we agree to the above terms, and that a Final Report (on attached Final Report or by Internal Financial Report detailing substantially same information) will be submitted within 15 days of the end of the project/event.

Signature and Title of Applicant John Elko John Elko **Date** 8/10/2022

For Official Use:

This funding request is: APPROVED NOT APPROVED TABLED

Amount Approved: $_____ Paid Date: _____

With the following notations:

_____

_____

_____

Action taken at Harrison County Commission meeting on: _____

9:40 AM
Melissa Sinisi

HARRISON COUNTY COMMISSION
SPECIAL FUNDING REQUEST

Thank you for the opportunity to suport your project. Please complete this application and return it to the Harisan County Commission, 301 West Main Street, Clarksburg, WV 26301 by fax or email: Facsimile: 304-624-8673; Email: wparker@harrisoncountywv.com ; Question: 304-624-8500
Funding is derived from the State of West Virginia/Video Lottery Funding.

Date of Request: August 2, 2022

Organization Name: Literacy Volunteers of Harrison County

Name and Title of Requester: Melissa Sinisi, Executive Director

Mailing Address of Organization and Responsible Person:
445 W Main Street, Clarksburg, WV, 26301
If approved, this is where the check will be sent

Telephone: 304-326-7762 Fax: n/a E-mail: lvhc@lvhc.org

FEIN# _____ Is your organization an IRS 501(c) 3 not-for-profit? (•) Y ( ) N
If yes, attach IRS Status Letter
If no, please explain:

TOTAL Cost of Project/Activity: $ 10,000

Dollar Amount REQUESTED - Grant: $ 2,000 Loan: $

Was project funded previously by HCC? Y ( ) N (•) If so, when _____; how much: $

Have you previously received funds from the Harrison County Commisson: Y N
If Yes, how much? If funded multi years - list by fiscal year?
When: June 2019 ; how much: $ 2,000
When: June 2020 ; how much: $ 2,000
When: _____ ; how much: $

Purpose of request (one sentence): We are seeking funds to help facilitate our mission of providing education to the citzens of Harrisor

If for a fair/festival/event, give dates and location: Date: _____ Location: _____

Describe the proposed activities with dollar amounts to be funded by this request:
The funds will be used to keep our English as a Second Language classes up and running , providing a means by which Harrison County residents can both learn English and obtain US citizenship. We will use the funds to provide Harrison County residents who do not have a high school diploma with the classes needed to take the test to obtain a high school diploma. Finally, we will use the funds to provide exceptional tutoring to any Harrison County student who needs the service. We will help with homework, tutor math, science, social studies and English language arts, and assist in studying for the ACT and the SAT tests.

Are your financial statements audited by an outside accounting firm? (•) Y ( ) N
If Yes, by whom: R Mark Kiger CPA

Do you plan to recognize the Harrison County Commission 's contribution? (•) Y ( ) N
If Yes, how? We will use their name in all social media and advertising in all of our en

(Name of Applicant) Literacy Volunteers of Harrison County agrees that in the event of any embezzlement, theft or misappropriation of funds or property of any kind or nature or in the event of any alleged embezzlement theft or misappropriation of funds or property of any kind or nature from (Name of Applicant) Literacy Volunteers of Harrison County, the recipient of funding from the Harrison County Commission hereunder, that (Name of Applicant) Literacy Volunteers of Harrison County shall immediately report said incident(s) to the proper police agency having jurisdiction over such matters and, further, shall immediately report said incident(s) along with a writing describing said incident(s) have been reported to the police agency having jurisdiction, to the Harrison County Commission. Further, that (Name of Applicant) Literacy Volunteers of Harrison County agrees to fully cooperate with the police and the Prosecuting Attorney's Office toward the successful prosecution of such activity.

Please attach to this Request the following:

1. IRS Letter of Tax Exemption, if you have one
2. Current List of Board of Directors with addresses
3. List other contributors with dollar amounts to your project/event
4. Balance sheet and income statement for immediate prior year, or reason why no available
5. Any additional information about your organization

FINAL REPORT REQUIRED: If approved, you agree to submit within 15 days of the event or end of project the "Final Report for Special Funding Request", on page 3 of this application OR a detailed statement of revenues and expenditures.

On behalf of the Applicant, I certify that all required information in this request is attached and correct, that we agree to the above terms, and that a Final Report (on attached Final Report or by Internal Financial Report detailing substantially same information) will be submitted within 15 days of the end of the project/event.

Signature and Title of Applicant Melissa McGinnis **Date** August 2, 2022

For Official Use:

This funding request is: APPROVED NOT APPROVED TABLED

Amount Approved: $_____ Paid Date: _____

With the following notations:

_____

_____

_____

Action taken at Harrison County Commission meeting on: _____

Name of Organization/Applicant _____

FINAL REPORT OF THE SPECIAL FUNDING REQUEST

AMOUNT RECEIVED FROM THE HARRISON COUNTY COMMISSION: $ _____

ITEMIZED EXPENSES FOR THE AMOUNT RECEIVED FROM THE HCC (ATTACH EXTRA SHEETS IF NECESSARY OR DETAILED STATEMENT OF REVENUED AND EXPENSES RELATED THERETO):

_____	$ _____
_____	$ _____
_____	$ _____
_____	$ _____
_____	$ _____
TOTAL	$ _____

NAME OF PROJECT/EVENT: _____

TOTAL PROJECT/EVENT INCOME AND EXPENSES: (ATTACH EXTRA SHEETS IF NECESSARY OR A DETAILED STATEMENT OF REVENUES AND EXPENSES RELATED THERETO):

INCOME SOURCE:	_____	$ _____
	_____	$ _____
	_____	$ _____
	TOTAL	$ _____
EXPENSE ITEM:	_____	$ _____
	_____	$ _____
	_____	$ _____
	TOTAL	$ _____

LIST ALL CONTRIBUTORS TO THIS PROJECT/EVENT: (ATTACH EXTRA SHEETS IS NECESSARY)

_____	$ _____
_____	$ _____
_____	$ _____
_____	$ _____
TOTAL	$ _____

I CERTIFY THAT THE ABOVE INFORAMTION IS CORRECT

_____ _____

Applicant Date

(Revised 8/19/14) Submit Form Print Form Page 3 Reset Form

PAYROLL CHANGE NOTICE

3-A. [redacted]

DATE OF CHANGE	EMPLOYEE #	SOCIAL SECURITY NO
9/4/2022		

NAME	ADDRESS
W. J. Cunningham	

PHONE	CITY/STATE/ZIP	DEPARTMENT	SHIFT
		L.E.	

THE CHANGE(S):

✓ All Applicable Boxes	FROM	TO
☐ DEPARTMENT		
☐ JOB		
☐ SHIFT		
☐ RATE		
☐ ADDRESS/PHONE		
☐ BENEFIT PLAN		
☐ OTHER _____		
☐ OTHER _____		

THE REASON FOR THE CHANGE(S):

- ☐ HIRED
- ☐ RE-HIRED
- ☐ PROMOTION
- ☐ DEMOTION
- ☐ TRANSFER
- ☐ MERIT INCREASE
- ☐ WAGE SCALE CHANGE
- ☐ LEAVE OF ABSENCE FROM _____ (DATE) UNTIL _____ (DATE)
- ☐ PROBATIONARY PERIOD COMPLETED
- ☐ LENGTH OF SERVICE INCREASE
- ☐ RE-EVALUATION OF EXISTING JOB
- ● RESIGNATION
- ☐ RETIREMENT
- ☐ LAYOFF
- ☐ DISCHARGE

TYPE OF LEAVE _____

☐ OTHER (Explain) Resignation effective 9/4/2022.

AUTHORIZATION:

EMPLOYEE SIGNATURE	DATE
SUPERVISOR SIGNATURE Ron G. Mathis, Sheriff	DATE 08/15/2022
HUMAN RESOURCES MANAGER Laura Pyle	DATE 8/17/2022

Rev 3/16 Re-order Form #08320 ©copyright 2016 Amsterdam Printing, Amsterdam, N.Y. 12010
Toll Free 1-866-466-1438 or online www.amsterdamforms.com
Amsterdam

PAYROLL CHANGE NOTICE

3-B.

DATE OF CHANGE	EMPLOYEE #	SOCIAL SECURITY NO
8/31/2022		| | |-| | |-| | | |

NAME	ADDRESS
Alan Long	

PHONE	CITY/STATE/ZIP	DEPARTMENT	SHIFT
		L.E.	

THE CHANGE(S):

✓ All Applicable Boxes	FROM	TO
☐ DEPARTMENT		
☐ JOB		
☐ SHIFT		
☐ RATE		
☐ ADDRESS/PHONE		
☐ BENEFIT PLAN		
☐ OTHER _____		
☐ OTHER _____		

THE REASON FOR THE CHANGE(S):

- ■ HIRED
- ☐ RE-HIRED
- ☐ PROMOTION
- ☐ DEMOTION
- ☐ TRANSFER
- ☐ MERIT INCREASE
- ☐ WAGE SCALE CHANGE
- ☐ LEAVE OF ABSENCE FROM _____ (DATE) UNTIL _____ (DATE)
- ☐ PROBATIONARY PERIOD COMPLETED
- ☐ LENGTH OF SERVICE INCREASE
- ☐ RE-EVALUATION OF EXISTING JOB
- ☐ RESIGNATION
- ☐ RETIREMENT
- ☐ LAYOFF
- ☐ DISCHARGE

TYPE OF LEAVE _____

☐ OTHER (Explain) Effective 8/31/2022, Starting Salary $53,304.82

AUTHORIZATION:

EMPLOYEE SIGNATURE	DATE
SUPERVISOR SIGNATURE Kathy D. Mattuy, Sheriff	DATE 08/17/2022
HUMAN RESOURCES MANAGER Donna Tyler	DATE 8/17/2022

Rev 3/16 Re-order Form #08320 ©copyright 2016 Amsterdam Printing, Amsterdam, N.Y. 12010
Toll Free 1-866-466-1438 or online www.amsterdamforms.com
Amsterdam

3-C

PAYROLL CHANGE NOTICE

DATE OF CHANGE	EMPLOYEE #	SOCIAL SECURITY NO
08/01/2022		|||-||-|||

NAME	ADDRESS
JOSHUA WEBBER	

PHONE	CITY/STATE/ZIP	DEPARTMENT	SHIFT
		MAINTENANCE	

THE CHANGE(S):

✓ All Applicable Boxes	FROM	TO
☐ DEPARTMENT		
☐ JOB		
☐ SHIFT		
☐ RATE		
☐ ADDRESS/PHONE		
☐ BENEFIT PLAN		
☐ OTHER _____		
☐ OTHER _____		

THE REASON FOR THE CHANGE(S):

☐ HIRED	☐ PROBATIONARY PERIOD COMPLETED
☐ RE-HIRED	☐ LENGTH OF SERVICE INCREASE
☐ PROMOTION	☐ RE-EVALUATION OF EXISTING JOB
☐ DEMOTION	☑ RESIGNATION
☐ TRANSFER	☐ RETIREMENT
☐ MERIT INCREASE	☐ LAYOFF
☐ WAGE SCALE CHANGE	☐ DISCHARGE

☐ LEAVE OF ABSENCE FROM _____ (DATE) UNTIL _____ (DATE)

TYPE OF LEAVE _____

☐ OTHER (Explain) _____

AUTHORIZATION:

EMPLOYEE SIGNATURE	DATE
SUPERVISOR SIGNATURE	DATE 08/23/2022
HUMAN RESOURCES MANAGER	DATE 8/23/2022

PRINTED IN USA Rev 3/16 Re-order Form #08320 ©copyright 2020 Amsterdam Printing, Amsterdam, N.Y. 12010
Toll Free 1-866-466-1438 or online www.amsterdamforms.com
Amsterdam

3-D

PAYROLL CHANGE NOTICE

DATE OF CHANGE	EMPLOYEE #	SOCIAL SECURITY NO
08/24/2022		| | |-| | |-| | | | |

NAME	ADDRESS
ELISAH FLOYD	

PHONE	CITY/STATE/ZIP	DEPARTMENT	SHIFT
		MAINTENANCE	

THE CHANGE(S):

✓ All Applicable Boxes	FROM	TO
☐ DEPARTMENT		
☐ JOB		
☐ SHIFT		
☐ RATE		
☐ ADDRESS/PHONE		
☐ BENEFIT PLAN		
☐ OTHER _____		
☐ OTHER _____		

THE REASON FOR THE CHANGE(S):

☐ HIRED	☐ PROBATIONARY PERIOD COMPLETED
☐ RE-HIRED	☐ LENGTH OF SERVICE INCREASE
☐ PROMOTION	☐ RE-EVALUATION OF EXISTING JOB
☐ DEMOTION	☑ RESIGNATION
☐ TRANSFER	☐ RETIREMENT
☐ MERIT INCREASE	☐ LAYOFF
☐ WAGE SCALE CHANGE	☐ DISCHARGE

☐ LEAVE OF ABSENCE FROM _____ (DATE) UNTIL _____ (DATE)

TYPE OF LEAVE _____

☐ OTHER (Explain) SUMMER HELP - RETURNED TO SCHOOL

FINAL DAY - 08/23/2022

AUTHORIZATION:

EMPLOYEE SIGNATURE	DATE
SUPERVISOR SIGNATURE	DATE 08/24/2022
HUMAN RESOURCES MANAGER	DATE 8/24/2022

PRINTED IN USA Rev 3/16 Re-order Form #08320 ©copyright 2020 Amsterdam Printing, Amsterdam, N.Y. 12010
Toll Free 1-866-466-1438 or online www.amsterdamforms.com
Amsterdam

PAYROLL CHANGE NOTICE

3-E

DATE OF CHANGE	EMPLOYEE #	SOCIAL SECURITY NO
8/31/2022		

NAME	ADDRESS
Bobbi Jo Gray	

PHONE	CITY/STATE/ZIP	DEPARTMENT	SHIFT
		Process	

THE CHANGE(S):

All Applicable Boxes	FROM	TO
☐ DEPARTMENT		
☐ JOB		
☐ SHIFT		
☐ RATE		
☐ ADDRESS/PHONE		
☐ BENEFIT PLAN		
☐ OTHER _____		
☐ OTHER _____		

THE REASON FOR THE CHANGE(S):

☐ HIRED	☐ PROBATIONARY PERIOD COMPLETED
☐ RE-HIRED	☐ LENGTH OF SERVICE INCREASE
☐ PROMOTION	☐ RE-EVALUATION OF EXISTING JOB
☐ DEMOTION	● RESIGNATION
☐ TRANSFER	☐ RETIREMENT
☐ MERIT INCREASE	☐ LAYOFF
☐ WAGE SCALE CHANGE	☐ DISCHARGE

☐ LEAVE OF ABSENCE FROM _____ (DATE) UNTIL _____ (DATE)

TYPE OF LEAVE _____

☐ OTHER (Explain) Resignation effective 8/31/2022, please pay accrued vacation days.

AUTHORIZATION:

EMPLOYEE SIGNATURE	DATE
SUPERVISOR SIGNATURE Kelly J. Mattox, Sheriff	DATE 08/24/22
HUMAN RESOURCES MANAGER Dana Pyle	DATE 8/24/2022

Rev 3/16 Re-order Form #08320 Copyright 2016 Amsterdam Printing, Amsterdam, N.Y. 12010
Toll Free 1-800-466-1438 or online www.amsterdamforms.com
Amsterdam

3-F

PAYROLL CHANGE NOTICE

DATE OF CHANGE	EMPLOYEE #	SOCIAL SECURITY NO
8/31/2022		

NAME	ADDRESS
Gary Dennis Burner	

PHONE	CITY/STATE/ZIP	DEPARTMENT	SHIFT
		716	

THE CHANGE(S):

✓ All Applicable Boxes	FROM	TO
☐ DEPARTMENT		
☐ JOB	Deputy Director	Interim Director
☐ SHIFT		
X RATE	8-4 (46.350.96)	11-3 (49.644)
☐ ADDRESS/PHONE		
☐ BENEFIT PLAN		
☐ OTHER _____		
☐ OTHER _____		

THE REASON FOR THE CHANGE(S):

☐ HIRED	☐ PROBATIONARY PERIOD COMPLETED
☐ RE-HIRED	☐ LENGTH OF SERVICE INCREASE
☐ PROMOTION	☐ RE-EVALUATION OF EXISTING JOB
☐ DEMOTION	☐ RESIGNATION
☐ TRANSFER	☐ RETIREMENT
☐ MERIT INCREASE	☐ LAYOFF
☐ WAGE SCALE CHANGE	☐ DISCHARGE

☐ LEAVE OF ABSENCE FROM _____ (DATE) UNTIL _____ (DATE)

TYPE OF LEAVE _____

☐ OTHER (Explain) During Interim Period

AUTHORIZATION:

EMPLOYEE SIGNATURE	DATE
SUPERVISOR SIGNATURE	DATE
HUMAN RESOURCES MANAGER Laura Ryle	DATE 8/26/2022

PRINTED IN USA Rev 3/16 Re-order Form #08320 ©copyright 2020 Amsterdam Printing, Amsterdam, N.Y. 12010
Toll Free 1-866-466-1438 or online www.amsterdamforms.com
Amsterdam®

PAYROLL CHANGE NOTICE

DATE OF CHANGE	EMPLOYEE #	SOCIAL SECURITY NO
9/9/2022		| | |-| | |-| | | | |

NAME	ADDRESS
Roberta Barnett	

PHONE	CITY/STATE/ZIP	DEPARTMENT	SHIFT
		439	

THE CHANGE(S):

✓ All Applicable Boxes	FROM	TO
☐ DEPARTMENT		
☐ JOB		
☐ SHIFT		
☐ RATE		
☐ ADDRESS/PHONE		
☐ BENEFIT PLAN		
☐ OTHER _____		
☐ OTHER _____		

THE REASON FOR THE CHANGE(S):

- ☐ HIRED
- ☐ RE-HIRED
- ☐ PROMOTION
- ☐ DEMOTION
- ☐ TRANSFER
- ☐ MERIT INCREASE
- ☐ WAGE SCALE CHANGE
- ☐ LEAVE OF ABSENCE FROM _____ (DATE) UNTIL _____ (DATE)
- ☐ PROBATIONARY PERIOD COMPLETED
- ☐ LENGTH OF SERVICE INCREASE
- ☐ RE-EVALUATION OF EXISTING JOB
- ☐ RESIGNATION
- ☒ RETIREMENT
- ☐ LAYOFF
- ☐ DISCHARGE

TYPE OF LEAVE _____

☐ OTHER (Explain) _____

AUTHORIZATION:

EMPLOYEE SIGNATURE Roberta Barnett	DATE 8/26/22
SUPERVISOR SIGNATURE Charlotte Hall	DATE
HUMAN RESOURCES MANAGER Deena Pyle	DATE 8/26/2022

PRINTED IN USA Rev 3/16 Re-order Form #08320 ©copyright 2020 Amsterdam Printing, Amsterdam, N.Y. 12010
Toll Free 1-866-466-1438 or online www.amsterdamforms.com
Amsterdam®

3-H

PAYROLL CHANGE NOTICE

DATE OF CHANGE	EMPLOYEE #	SOCIAL SECURITY NO
8/26/22		| | |-| | |-| | | | |
NAME: ANDREA DEROSSETT		ADDRESS
PHONE	CITY/STATE/ZIP	DEPARTMENT: 406 / SHIFT

THE CHANGE(S):

✓ All Applicable Boxes	FROM	TO
☐ DEPARTMENT		
☐ JOB	New Hire	
☐ SHIFT		
☐ RATE	Personal Property Deputy	
☐ ADDRESS/PHONE		
☐ BENEFIT PLAN		
☐ OTHER _____		
☐ OTHER _____		

THE REASON FOR THE CHANGE(S):

- ☑ HIRED
- ☐ RE-HIRED
- ☐ PROMOTION
- ☐ DEMOTION
- ☐ TRANSFER
- ☐ MERIT INCREASE
- ☐ WAGE SCALE CHANGE
- ☐ LEAVE OF ABSENCE FROM _____ (DATE) UNTIL _____ (DATE)
- ☐ PROBATIONARY PERIOD COMPLETED
- ☐ LENGTH OF SERVICE INCREASE
- ☐ RE-EVALUATION OF EXISTING JOB
- ☐ RESIGNATION
- ☐ RETIREMENT
- ☐ LAYOFF
- ☐ DISCHARGE

TYPE OF LEAVE _____

☐ OTHER (Explain) START DATE 9/1/22

PAY GRADE: 4 STEP 1 4-1

AUTHORIZATION:

EMPLOYEE SIGNATURE: Andrea DeRossett	DATE
SUPERVISOR SIGNATURE	DATE
HUMAN RESOURCES MANAGER: Laura Tyler	DATE: 8/26/2022

Rev 3/16 Re-order Form #08320 ©copyright 2020 Amsterdam Printing, Amsterdam, N.Y. 12010
Toll Free 1-866-466-1438 or online www.amsterdamforms.com
Amsterdam

3-I

PAYROLL CHANGE NOTICE

DATE OF CHANGE	EMPLOYEE #	SOCIAL SECURITY NO
8/26/22		| | | -| | | -| | | | |

NAME	ADDRESS
Joseph BARBERIO	

PHONE	CITY/STATE/ZIP	DEPARTMENT	SHIFT
		406	

THE CHANGE(S):

✓ All Applicable Boxes	FROM	TO
☐ DEPARTMENT		
☐ JOB	NEW HIRE	
☐ SHIFT		
☐ RATE		
☐ ADDRESS/PHONE	Personal Property	DeButy
☐ BENEFIT PLAN		
☐ OTHER _____		
☐ OTHER _____		

THE REASON FOR THE CHANGE(S):

☑ HIRED	☐ PROBATIONARY PERIOD COMPLETED
☐ RE-HIRED	☐ LENGTH OF SERVICE INCREASE
☐ PROMOTION	☐ RE-EVALUATION OF EXISTING JOB
☐ DEMOTION	☐ RESIGNATION
☐ TRANSFER	☐ RETIREMENT
☐ MERIT INCREASE	☐ LAYOFF
☐ WAGE SCALE CHANGE	☐ DISCHARGE

☐ LEAVE OF ABSENCE FROM _____ (DATE) UNTIL _____ (DATE)

TYPE OF LEAVE START DATE

☐ OTHER (Explain) 9/9/22

PR 4-1

Pay Grade 4 STEP 1

AUTHORIZATION:

EMPLOYEE SIGNATURE Joseph G Barberio	DATE
SUPERVISOR SIGNATURE	DATE
HUMAN RESOURCES MANAGER Laura Ryle	DATE 8/26/2022

PRINTED IN USA Rev 3/16 Re-order Form #08320 ©copyright 2010 Amsterdam Printing, Amsterdam, N.Y. 12010
Toll Free 1-866-466-1438 or online www.amsterdamforms.com
Amsterdam®

PAYROLL CHANGE NOTICE

35

DATE OF CHANGE	EMPLOYEE #	SOCIAL SECURITY NO
8/25/22		| | |-| | |-| | | | |

NAME	ADDRESS
Rick WATSON	

PHONE	CITY/STATE/ZIP	DEPARTMENT	SHIFT
		406	

THE CHANGE(S):

✓ All Applicable Boxes	FROM	TO
☐ DEPARTMENT	ASSESSOR	406
☐ JOB		
☐ SHIFT		
☐ RATE		
☐ ADDRESS/PHONE		
☐ BENEFIT PLAN		
☐ OTHER _____		
☐ OTHER _____		

THE REASON FOR THE CHANGE(S):

☐ HIRED	☐ PROBATIONARY PERIOD COMPLETED
☐ RE-HIRED	☐ LENGTH OF SERVICE INCREASE
☐ PROMOTION	☐ RE-EVALUATION OF EXISTING JOB
☐ DEMOTION	☐ RESIGNATION
☐ TRANSFER	☑ RETIREMENT
☐ MERIT INCREASE	☐ LAYOFF
☐ WAGE SCALE CHANGE	☐ DISCHARGE

☐ LEAVE OF ABSENCE FROM _____ (DATE) UNTIL _____ (DATE)

TYPE OF LEAVE Retirement

☐ OTHER (Explain) 8/31/22

AUTHORIZATION:

EMPLOYEE SIGNATURE Joseph A Ramond	DATE 8/25/22
SUPERVISOR SIGNATURE	DATE
HUMAN RESOURCES MANAGER Laura Ryan	DATE 8/26/2022

PRINTED IN USA Rev 3/16 Re-order Form #08320 ©copyright 2020 Amsterdam Printing, Amsterdam, N.Y. 12010
Toll Free 1-866-466-1438 or online www.amsterdamforms.com
Amsterdam

4-A

At the regular meeting of the County Commission of Harrison County held on Wednesday August 3, 2022, Commissioners Susan Thomas, David Hinkle and Patsy Trecost II were present. Also present were Laura Pysz, County Administrator, and Micah Fisher, Deputy County Clerk. Commissioner Thomas opened the meeting and Commissioner Trecost said the Lord's Prayer and led those present in the Pledge of Allegiance to the Flag.

1. Public Comment Period: NONE
2. Consent Agenda: Trecost moved to approve. Commission concurred.
3. Payroll Change Notices: Trecost moved to approve. Hinkle moved to enter into executive session. Commissioner Hinkle voted in favor. Commissioner Thomas and Commissioner Trecost voted against. Motion failed. Laura Pysz, County Administrator, advised that this decision was made by the park board. There was discussion of Mr. Comer being a Commission employee and there not being an agreement between the Commission and the Park Board to become separate entities.

Item A: Hinkle moved table this item until Parks and Recreation is a separate entity and takes over their own payroll. Commissioner Hinkle voted in favor. Commissioner Thomas and Commissioner Trecost voted against. Motion failed.

Item C: Hinkle moved to enter into executive session. Commissioner Hinkle voted in favor. Commissioner Thomas and Commissioner Trecost voted against. Motion failed. There was discussion of how executive sessions are handled now versus in the past. Commissioner Trecost moved to enter into executive session pursuant to W.Va. Code 6-9A-4(b)(2)(A) to consider matters arising from the appointment, employment, retirement, promotion, transfer, demotion, disciplining, resignation, discharge, dismissal or compensation of a public officer or employee. Commission concurred. Trecost moved to enter back into regular session. Commission concurred. Trecost moved to approve Item 3 A through I. Commission concurred.

A. Douglas R. Comer --- Wage Scale Change --- Parks & Rec (potential executive session pursuant to W.Va. Code 6-9A-4(b)(2)(A) to consider matters arising from the appointment, employment, retirement, promotion, transfer, demotion, disciplining, resignation, discharge, dismissal or compensation of a public officer or employee).

B. Larry Jay Brewer --- Resignation --- Effective 07-17-2022 --- L.E.

C. Elizabeth Keough --- Discharge --- Effective 07-21-2022 --- Animal Control (potential executive session pursuant to W.Va. Code 6-9A-4(b)(2)(A) to consider matters arising from the appointment, employment, retirement, promotion, transfer, demotion, disciplining, resignation, discharge, dismissal or compensation of a public officer or employee).

D. James McManus --- New Hire --- Effective 08-03-2022 --- L.E.

E. Shara James --- New Hire --- Effective 08-03-2022 --- Staging

F. Derek Marsh --- Part-Time on Call --- Effective 08-03-2022 --- Security

G. Kortney Hill --- Discharge --- Effective 07-27-2022 --- 911 (potential executive session pursuant to W.Va. Code 6-9A-4(b)(2)(A) to consider matters arising from the appointment, employment, retirement, promotion, transfer, demotion, disciplining, resignation, discharge, dismissal or compensation of a public officer or employee)

H. Diana Caton- Milliman --- Resignation --- Effective 07-29-2022 --- Circuit Clerk

I. Jackie Erin Fetty --- New Hire --- Effective 08-10-2022 --- Circuit Clerk

10:05 A.M. --- Funding Request --- Rebecca Flanagan ---Stars & Strides Therapeutic Equine Center: Commissioner Trecost recused himself because he sits on the board. Rebecca Flanagan and Sherri Staten. Ms. Flanagan explained the funding request in the amount of $3,000.00 for a six week program that they have started for teens on probation. Ms. Flanagan advised that they have been working with the probation department along with Judge Peter Conley. Hinkle moved to approve the funding in the amount of $3,000.00. Commission concurred.

10:15 A.M. --- Funding Request --- Frankie Dennison --- Humane Society of Harrison County: Frankie Dennison advised that they are asking for funding in the amount of $30,000.00 for the year. Ms. Dennison explained that with the spay and neuter program they normally give $45.00 for cats and $50.00 for dogs and she would like to give $75.00 to everyone starting this year. There was discussion of the funds coming out of the Community Improvement fund in the past and maybe going through the levy funds for animal control in the future. Hinkle moved to approve $25,000.00 if the funds come out of Community Improvement fund and $30,000.00 if the funding can come out of the levy funds. Commission concurred.

4. Minutes and /or Amended Minutes of Previous Meeting: Trecost moved to approve. Commission concurred.

   A. Regular Meeting Minutes --- 06-29-2022

5. Requisitions --- Purchase Orders --- Invoices: Trecost moved to approve. Commissioner Hinkle asked about paying vendors directly out of ARPA funds. Michelle Tonkin from the Grant Department advised that it is allowable under the ARPA guidelines. Ms. Tonkin explained that this is the recipients choice and is faster. Ms. Tonkin advised that they must submit adequate information before the payment can be made. Trecost moved to approve with the change to remit payments to the municipalities. Commission concurred.

   A. Vendor Requisition List of Payments

6. Exonerations --- Corrective Tickets --- Joint Property Application: Trecost moved to approve. Commission concurred.

   A. Exonerations --- See Exhibit A

   B. Corrective Tickets --- See Exhibit B

   C. Joint Property Application --- See Exhibit C

7. Consideration of approval of a Project Fund Requisition for the payment of costs associated with the project to be financed from proceeds of the Series 2019 Bonds issued for the Charles Pointe Economic Opportunity Development District, Series 2021 A & B

(Development District No. 3 White Oaks Project No. 2) & Series 2008 A (Charles Pointe Project No. 2 – North Land Bay Improvements: Trecost moved to approve. Commission concurred.

A. Requisition for Payment No. (08/03/22) $1,242.33

8. Consideration of Approval of Project Fund Requisitions for the payment of costs associated with the General Services Administration Building Project to be financed from proceeds of the Series 2020 Bonds issued for the Harrison County Building Commission: Trecost moved to approve. Commission concurred.
   A. Requisition Number: #71 --- Silling Associates, Inc. $14,285.98
   B. Requisition Number: #72 --- State Electric Supply Co. $784.85
   C. Requisition Number: #73 --- Advantage Technology $7,596.00
9. Review – Discuss - Consider City of Stonewood Requesting ARPA Funds in Their Total Allotment Amount of $100,000 be Paid Directly to Their Vendor (Thrasher): Handled in Item 5.
10. Review - Discuss – Consider Town of West Milford Requesting Their Second Draw of ARPA Funds in the Amount of $14,840 to be Paid Directly to Their Vendor (Dunlap Contracting): Handled in Item 5.
11. Review – Discuss – Consider West Virginia University Cooperative Extension Service & County Extension Service Committee --- Annual Memorandum of Agreement for Fiscal Year Beginning 07-01-2022: Laura Pysz explained that this is an MOU that is entered into every year with the Extension Service. Trecost moved to approve and for the President to affix signature. Commission concurred.
12. Review – Discuss – Consider Fire Chiefs Association --- Appointment of Marcus Shaw to 911 Advisory Board (3Yr. Term) --- Ron Woods (1yr) --- Walter Knight (2yr): Trecost moved to approve. Commission concurred.
13. Review – Discuss – Consider Taylor County 911 Advisory Board Appointed Ryan Roberts --- Effective Immediately: Trecost moved to approve. Commission concurred.
14. Review – Discuss - Consider Dominion Trail for Rail Crossing: Charlotte Shaffer, Director of Planning, explained the agreement and advised that they are going to boar instead of digging. Trey Simmerman, County Attorney, approves of the agreement. Trecost moved to approve and to affix the proper signatures. Commission concurred.
    A. Matheny Hollow Road
    B. Hutchinson Hollow Road
    C. Mount Clare Road
15. Review – Discuss - Consider Potential Purchase of Parking Lots Adjacent to Courthouse (Potential Executive Session Pursuant to 6-9A-4(b)(9) to Consider Matters Involving or Affecting the Purchase, Sale or Lease of Property, Advance Construction Planning, the investment of Public Funds or Other Matters Involving Commercial Competition, which if Made Public, Might Adversely Affect the Financial or Other Interest of the County). Trecost moved table this item until further information is obtained. Commission concurred.

16. Review – Discuss – Consider Harrison County Ambulance Authority Appointment of Emily Cook to Fill the Unexpired Term of Roger Diaz: Trecost moved to approve. Commission concurred.
17. Review – Discuss – Consider Resolution for Sheriff's Department Lease of Twelve 2022 Police Vehicles thru Country Roads Leasing, LLC: Trecost moved to approve. Laura Pysz the resolution for twelve 2022 police cruisers. Trey Simmerman, County Attorney, advised that he would approve as framed in the agreement with locked in rates and terms. Trecost moved to approve as stated by the County Attorney and affix signatures and not to exceed $250,000.00. Commission concurred.
18. Review – Discuss – Consider Publicizing Elevator RFP: Laura Pysz explained the RFP for the elevator. Trecost moved to proceed with the RFP. Commission concurred.
19. Review – Discuss – Consider Service agreement West Virginia Network (WVNET) & Harrison County Commission: Laura Pysz advised that this item is for the OZ system that the Commission uses. Hinkle moved to approve but to have staff look into other options and come back to the Commission in sixty days. Commission concurred.
20. Review – Discuss – Consider Permission to Travel --- Robert Leonard --- Class & Exam for Asbestos Testing --- Reclaim Company, Fairmont, WV ---08-08-2022 to 08-10-2022 Planning Department: Trecost moved to approve item twenty and twenty one. Commission concurred.
21. Review – Discuss – Consider Permission to Travel --- James Richards --- Class & Exam for Asbestos Testing --- Reclaim Company, Fairmont, WV ---08-08-2022 to 08-10-2022 Planning Department: Handled in item twenty one.
22. Review – Discuss – Consider General County Budget Revision: NONE
22. Administrator's Report: Laura Pysz advised that she is still working on a solution for the air conditioning in the annex.
23. Commissioner Comments – Questions: Commissioner Hinkle advised that he would like a work session on Monday August 8th at 10:00 am to discuss the parking lot and there might be a potential executive session.

Trecost moved to adjourn. Commission concurred.

With no further business to come before the Commission, meeting adjourned.

_____ _____

Susan Thomas, President Date

DRAFT

4-B

At the special meeting of the County Commission of Harrison County held on Monday August 8, 2022, Commissioners Susan Thomas and David Hinkle was present. Commissioner Patsy Trecost II was absent. Also present was Micah Fisher, Deputy County Clerk, and Laura Pysz, County Administrator.

1. **Amendment 2 Update and Consideration of Impact – Personal Property Tax:** There was discussion of the unknown if this matter passes in the November election. Joseph Romano, Assessor, gave an overview of some information that he had obtained regarding the Amendment 2. There was also discussion on doing voter education of what is being voted on in November.
2. ***Parking Lots behind Courthouse acquisition*** (Potential Executive Session Pursuant to 6-9A-4(b)(9) to Consider Matters Involving or Affecting the Purchase, Sale or Lease of Property, Advance Construction Planning, the investment of Public Funds or Other Matters Involving Commercial Competition, which if Made Public, Might Adversely Affect the Financial or Other Interest of the County).
   Hinkle moved to enter into executive session. Commission concurred.
   Hinkle moved to enter back into regular session. Commission concurred.
3. ***Commercial Development Issues*** (Potential Executive Session Pursuant to 6-9A-4(b)(9) to Consider Matters Involving or Affecting the Purchase, Sale or Lease of Property, Advance Construction Planning, the investment of Public Funds or Other Matters Involving Commercial Competition, which if Made Public, Might Adversely Affect the Financial or Other Interest of the County).
   Hinkle moved to combine items three and four and enter into executive session. Commission concurred.
   Hinkle moved to enter back into regular session. Commission concurred.
4. ***GSA Building Status of Construction*** (Potential Executive Session Pursuant to 6-9A-4(b)(9) to Consider Matters Involving or Affecting the Purchase, Sale or Lease of Property, Advance Construction Planning, the investment of Public Funds or Other Matters Involving Commercial Competition, which if Made Public, Might Adversely Affect the Financial or Other Interest of the County).
   This item was handled with item three.

5. ***Budget & Budget Revisions*** (Possible Executive Session Pursuant to W.Va. Code 6-9A-4(b)(9) to Consider Matters Involving or Affecting the Purchase, Sale or Lease of Property, Advance Construction Planning, the investment of Public Funds or Other Matters Involving Commercial Competition, which if Made Public, Might Adversely Affect the Financial or Other Interest of the County).
   Hinkle moved to table this item. Commission concurred.

   Commissioner Hinkle moved to adjourn. Commission concurred.

_____ _____

Susan Thomas, President Date

4-C

At the regular meeting of the County Commission of Harrison County held on Wednesday August 10, 2022, Commissioners Susan Thomas, David Hinkle and Patsy Trecost II were present. Also present were Laura Pysz, County Administrator, and Micah Fisher, Deputy County Clerk. Commissioner Thomas opened the meeting and Johnny Davis said a prayer and led those present in the Pledge of Allegiance to the Flag.

Commissioner Thomas advised that Delegate Clay Riley will not be present today.

1. Public Comment Period: NONE
2. Consent Agenda: Trecost moved to approve. Commission concurred.
3. Payroll Change Notices: Trecost moved to approve items A through C. Commission concurred.
   A. Eugene Conaway -- Part-Time on Call -- Effective 08-10-2022 -- Security
   B. Walter Scott Williams -- Part-Time on Call -- Effective 08-10-2022 – Security
   C. Titus Thomas – New Hire – Effective 08-10-2022 – L.E.
4. Minutes and /or Amended Minutes of Previous Meeting: Hinkle moved to approve as presented. Commission concurred.
   A. Regular Meeting Minutes --- 07-20-2022
5. Requisitions --- Purchase Orders --- Invoices: Trecost moved to approve. Commission concurred.
   A. Vendor Requisition List of Payments
6. Exonerations --- Corrective Tickets --- Joint Property Application: Trecost moved to approve items A through C. Commission concurred.
   A. Exonerations --- See Exhibit A
   B. Corrective Tickets --- See Exhibit B
   C. Apportionment of Jointly Owned Motor Vehicles --- See Exhibit C
7. Consideration of approval of a Project Fund Requisition for the payment of costs associated with the project to be financed from proceeds of the Series 2019 Bonds issued for the Charles Pointe Economic Opportunity Development District, Series 2021 A & B (Development District No. 3 White Oaks Project No. 2) & Series 2008 A (Charles Pointe Project No. 2 – North Land Bay Improvements: Trecost moved to approve. Commission concurred.
   A. Requisition for Payment No. 14 --- MuniCap, Inc. $100.00
   B. Requisition for Payment No. (08/10/22) --- MuniCap, Inc. $7,506.25
   C. Requisition for Payment No. 34 --- Genesis Partners, Limited Partnership $15,295.89

D. Requisition for Payment No. 34 --- $305,917.73

8. Consideration of Approval of Project Fund Requisitions for the payment of costs associated with the General Services Administration Building Project to be financed from proceeds of the Series 2020 Bonds issued for the Harrison County Building Commission: (NONE)
9. Review – Discuss - Consider Appointment of Robert Greer as Fiduciary Commissioner to Fill the Vacant Position with the Retirement of Jim Turner: Trecost moved to approve. Commission concurred.
10. Review - Discuss – Consider Resolution Authorizing the Acceptance of the West Virginia DEP Litter Control Grant Program: Laura Pysz, County Administrator, explained that $5,000.00 was applied for but only $2,500.00 was received to go towards tearing down a dilapidated structure. Trecost moved to approve. Commission concurred.
11. Review – Discuss – Consider Reappointments for Term 07-01-2021 – 063-30-2024 to Harrison County Development Authority: Hinkle moved to approve items A through D. Commission concurred.
    A. Chris Lane ---- Business
    B. Brian Crawford --- Salem
    C. Sam Maxon --- Nutter Fort
    D. Susan Thomas --- County Commission

10:05 A.M. --- Funding Request --- Tyler Terango --- Italian Heritage Festival: Trecost moved to approve funding in the amount of $3,000.00. Laura Pysz advised that the paperwork is in order. Commission concurred.

12. Review – Discuss – Consider Authorization to Close at 12:30 P.M. Friday, September 2, 2022 Due to use of the Plaza by WV Italian Heritage Festival: Trecost moved to approve. Commission concurred. Commissioner Hinkle would like to make sure the judges are ok with the schedule change.
13. Review – Discuss – Consider General County Budget Revision: Laura Pysz, County Administrator, advised that the fund balance was not at 4.6 million like proposed and there needs to be a budget revision. Hinkle moved to approve moving $1,103,754.00 in funds from the Financial Stabilization Fund to the General County Fund. Commission concurred.
14. Administrator's Report: Laura Pysz advised that the GSA building is on day two of no air conditioning on the Day Report side of the building. Ms. Pysz also advised that there is a water issue which is either located at the garage door or poor drainage. Commissioner Hinkle would like cameras set up to see where the water is coming from.

10:15 A.M. --- Proclamation --- United Way – Aimee Comer: Brad Rifee and Aimee Comer. Commissioner Thomas read and presented the Proclamation to the United Way. The Harrison County Commission hereby declares August 10, 2022 as "United Way of Harrison and Doddridge Counties Day".

15. Commissioner Comments – Questions: NONE

Hinkle moved to adjourn. Commission concurred.

With no further business to come before the Commission, meeting adjourned.

_____ _____

Susan Thomas, President Date

4-D

At the regular meeting of the County Commission of Harrison County held on Wednesday August 17, 2022, Commissioners Susan Thomas, David Hinkle and Patsy Trecost II were present. Also present were Laura Pysz, County Administrator, and John Spires, County Clerk. Commissioner Thomas opened the meeting and led the Lord's Prayer and led those present in the Pledge of Allegiance to the Flag.

1. Public Comment Period: NONE
2. Consent Agenda: Trecost moved to approve. Commission concurred.
3. Payroll Change Notices: Trecost moved to approve. Commission concurred.
   A. Vincent Oliverio --- On Call Part-Time as Needed --- Effective 08-17-2022 --- Security
   B. Bryan K. Long II --- Part-Time as Needed --- Effective 08-17-2022 --- Staging
4. Minutes and /or Amended Minutes of Previous Meeting: (NONE)
5. Requisitions --- Purchase Orders --- Invoices: Hinkle moved to approve. Commissioner Hinkle and Commissioner Trecost voted in favor. Commissioner Thomas voted against. Motion carried.
   A. Vendor Requisition List of Payments
6. Exonerations --- Corrective Tickets --- Joint Property Application: Trecost moved to approve. Commission concurred.
   A. Exonerations --- See Exhibit A
   B. Corrective Tickets --- See Exhibit B
7. Consideration of approval of a Project Fund Requisition for the payment of costs associated with the project to be financed from proceeds of the Series 2019 Bonds issued for the Charles Pointe Economic Opportunity Development District, Series 2021 A & B (Development District No. 3 White Oaks Project No. 2) & Series 2008 A (Charles Pointe Project No. 2 – North Land Bay Improvements: (NONE)
8. Review – Discuss – Consider GSA Change Order: Laura Pysz, County Administrator, summarized the change requests. Ms. Pysz advised that the total amount of the change orders are $46,755.00. Hinkle moved to table this matter until there is more information obtained. Commission concurred.

10:05 A.M. --- Estate Hearing for Appointments Set Aside --- David Bolyard

* Shari Lynn Davisson
*Patty Sue Flanagan
*Timothy John Findley
*Deborah Baker

Laura Pysz explained that Mr. Bolyard is wanting to be appointed as the new administrator of the above estates due to the current administrator no longer being an employee and is unable to serve. Trecost moved to appoint David Bolyard as the new administrator of the above estates. *Commission concurred. An order will be prepared for this matter.*

9. Consideration of Approval of Project Fund Requisitions for the payment of costs associated with the General Services Administration Building Project to be financed from proceeds of the Series 2020 Bonds issued for the Harrison County Building Commission: (NONE)
10. Review – Discuss - Consider GSA Building Status of Construction --- (Potential Executive Session Pursuant to 6-9A-4(b)(9) to Consider Matters Involving or Affecting the Purchase, Sale or Lease of Property, Advance Construction Planning, the investment of Public Funds or Other Matters Involving Commercial Competition, which if Made Public, Might Adversely Affect the Financial or Other Interest of The County): Trecost moved to not enter into executive session and have the County Administrator explain. Laura Pysz explains that this matter should be a standing agenda item until the Commission takes possession of the building. Commissioner Thomas and Commissioner Trecost voted in favor. Commissioner Hinkle voted against. Motion carried.
11. Review - Discuss – Consider Letter of Support for Grant Application for the City of Clarksburg: Laura Pysz advised that the City of Clarksburg is applying for a grant and this is a letter of support from the County Commission. John Whitmore, Economic Development Director for the City of Clarksburg, advised that the City will be applying for more grants now that they have a full time grant writer. Trecost moved to approve and affix the County Administrator's signature. Commission concurred.
12. Review – Discuss – Consider Changing the Commission Meeting Time from 10:00am to 9:00am on Commission Meeting Days: Trecost moved to approve. Commissioner Hinkle would like to go to meeting every other week. Commissioner Trecost amends his motion to change the time as well as going to meeting every other week effective immediately. Commission concurred.
13. Review – Discuss – Consider Entering into an Agreement with Ralph Pederson as an Architect Consultant: Laura Pysz explained and recommends entering into an agreement with Mr. Pederson for the GSA project. Hinkle moved to approve the hiring of Mr. Pederson. Commission concurred.
14. Administrator's Report: Laura Pysz advised that there is going to be a posting to hire two dispatchers. Ms. Pysz also advised that there will be RFPs hitting the website very soon for Janitorial Services, Elevators and an Appraisal Services for the Development

Authority. Ms. Pysz explained that the Town of Anmoore submitted a letter of gratitude for the ARPA funds that they will be using for existing water infrastructure.

15. Commissioner Comments – Questions: Commissioner Thomas stated that the new airport terminal is going to be great for Harrison County. Commissioner Hinkle advised that the new terminal is important to Harrison County and a new A&P school could double the amount of participants in that program.

Trecost moved to adjourn. Commission concurred.

With no further business to come before the Commission, meeting adjourned.

_____ _____

Susan Thomas, President Date

DRAFT

August 31, 2022

5-A

Date of Meeting	August 31, 2022		
Work Order Number	Vendor Name	Amount of Invoice-Quote	Description
40457	Frontier West Virginia	$766.00	Data Circuits PK Tower 911
40466	Lowe's Home Improvement	$610.00	Supplies Comm. Corrrections
40467	Carol Moscar	$250.00	Reimbursement Comm.Corr
40483	State Electric Supply Co.	$183.90	Bulbs Shinnston Tower 911
40493	Trac Solutions	$4,066.50	Home Confinement
40496	Lowe's Home Improvement	$27.87	Supplies 911 Center
40497	James Richards	$26.45	Reimbursement Planning
40501	Lowe's Home Improvement	$37.00	Totes Parks & Rec. Complex
40502	JT Martin Fire & Safety	$112.94	Semi Annual Inspection Park & Rec.
40506	Thermex Inc.	$418.00	Refrigerator Repairs Parks&Rec
40510	Total Landscape Supply	$3,555.00	Mulch Parks & Rec.
40512	Hart Office Solutions	$46.36	Copier Rental Voters
40513	Dominion Energy of WV	$412.93	Service Various Locations
40514	Mon Power	$251.21	Service Extension Office
40515	Mon Power	$1,233.82	Service Park & Rec. Complex
40516	Mon Power	$645.77	Shinnston Tower 911
40517	Chem Aqua	$250.00	Broiler Water Treatment Senior Center
40518	Waste Management	$73.37	Waste taken to Landfill
40519	Mon Power	$241.63	Service Animal Control
40520	Fed Ex	$4.13	Postage Courthouse
40521	WV Fittness 24	$544.00	Wellness July 2022
40522	Tara Hodge	$11.16	Milage Reimbursement Animal Control
40523	MCM Business Systems	$662.10	Various Copier Rentals Courthouse
40524	Truist Bank	$428.47	Various Charges Law Enforce
40525	Robin's Perfect Fit	$36.00	Alterations Deputy Kerby
40526	Minard's Spaghetti Inn	$250.00	Advisory Board Luncheon Comm.Corr
40530	Marsh Hardware & Builder Supply	$60.00	Weed Killer Parks & Rec.
40533	Chem Aqua	$300.00	Broiler Water Treatment Courthouse
40534	James & Law	$2,134.00	40 Cases of 8.5 X11 Copy Paper
40535	Advance Auto Parts	$278.79	Automobile Parts County Garage
40536	Chenoweth Ford	$1,294.11	Automobile Parts County Garage
40537	Fisher Auto Parts	$1,393.15	Automobile Parts County Garage
40538	Lowe's Home Improvement	$69.13	Maintenance Supplies County Garage
40539	Staples	$27.29	Office Supplies County Commission
40540	Staples	$349.78	Toner Animal Control
Laura Pysz	General Fund	$1,024,842.98	Transfer of Funds
	Total	$1,045,893.84	

6-A
Exhibit A

Exhibit A Exonerations

RE 185 VINCENT, CHARLES E. ETUX (LE) SARITA L. ROBINSON ETVIR
RE 186 VINCENT, CHARLES E. ETUX (LE) SARITA L. ROBINSON ETVIR
RE 187 VINCENT, CHARLES E. ETUX (LE) SARITA L. ROBINSON ETVIR
RE 188 VINCENT, CHARLES E. ETUX (LE) SARITA L. ROBINSON ETVIR
RE 189 VINCENT, CHARLES E. ETUX (LE) SARITA L. ROBINSON ETVIR
PP 237 AYERS, APRIL L.
PP 238 AYERS-GILLESPIE, APRIL L.
PP 239 AYERS-GILLESPIE, APRIL L.
PP 240 GILES, GREGORY GORDON & CAROL T.
PP 241 GILLESPIE, DAVID E.
PP 242 GILLESPIE, DAVID E.
PP 243 MARTIN, JAMES A.

RE 185

EXONERATIONS

STATE OF WEST VIRGINIA **COUNTY OF HARRISON**

Real Estate

At a regular term of the County Commission of Harrison County, West Virginia, held at the Courthouse of said County, Commissioners

David Hinkle **Susan J. Thomas** **Patsy Trecost II**

On the 31st day of August, 2022 issued the following order, which was made and entered, to-wit:

Upon application of DMCNEMAR for **VINCENT CHARLES E ETUX (LE) (SARITA L ROBINSON ETVIR)** whose address is, 149 NIXON HOLLOW RD BRIDGEPORT, WV 26330-7128, who proved to the satisfaction of the Commission that said property owner is aggrieved by an erroneous assessment of **26580** on **PT 2.83 AS CUNNINGHAM RUN (VINCENTS RES TAN DWLG)**, Class **3/4** in **CLAY-OUTSIDE**, Harrison County, West Virginia, which should have been assessed at **26580**, Class **2** in and for the year **2018**, resulting in a difference in assessed value of **0**. The Commission therefore, orders that the said applicant be and is hereby exonerated from the said erroneous assessment and from the payment of the taxes so assessed, in and for the year **2018**, if the same has not been paid, and if it has been paid, that the Sheriff refund the same to them.

The commission certifies the following facts upon which it grants said relief:

The above mentioned property is owner occupied by Charles & Patricia Vincent & has been for several years. Robinsons let them have (LE) & reside in the property therefore Class 2 applies. Exonerate a value of 13290 at a Class 3 rate of levy to correct the overcharge. ***PLEASE UPDATE LEGAL FROM RENTAL TO RES***

District: **05 - CLAY-OUTSIDE**
Account No. **6278155**
Ticket No. **16965**
Tax Year **2018**

Amount Exonerated: $ 305.19

_____
PRESENT: Prosecuting Attorney
(or)

_____
PRESENT: Tax Commissioner

_____
ATTEST: County Clerk

ASSESSOR

_____

_____
APPROVED: President, County Commission

ORDER ENTERED TO STATE AUDITOR

_____

RE 1816

EXONERATIONS

STATE OF WEST VIRGINIA **COUNTY OF HARRISON**

Real Estate

At a regular term of the County Commission of Harrison County, West Virginia, held at the Courthouse of said County, Commissioners

David Hinkle **Susan J. Thomas** **Patsy Trecost II**

On the 31st day of August, 2022 issued the following order, which was made and entered, to-wit:

Upon application of DMCNEMAR for **VINCENT CHARLES E ETUX (LE) (SARITA L ROBINSON ETVIR)** whose address is, 149 NIXON HOLLOW RD BRIDGEPORT, WV 26330-7128, who proved to the satisfaction of the Commission that said property owner is aggrieved by an erroneous assessment of **26940** on **PT 2.83 AS CUNNINGHAM RUN (VINCENTS RES TAN DWLG)**, Class **3/4** in **CLAY-OUTSIDE**, Harrison County, West Virginia, which should have been assessed at **26940**, Class **2** in and for the year **2019**, resulting in a difference in assessed value of **0**. The Commission therefore, orders that the said applicant be and is hereby exonerated from the said erroneous assessment and from the payment of the taxes so assessed, in and for the year **2019**, if the same has not been paid, and if it has been paid, that the Sheriff refund the same to them.

The commission certifies the following facts upon which it grants said relief:

The above mentioned property is owner occupied by Charles & Patricia Vincent & has been for several years. Robinsons let them have (LE) & reside in the property therefore Class 2 applies. Exonerate a value of 13470 at a Class 3 rate of levy to correct the overcharge. ***PLEASE UPDATE LEGAL FROM RENTAL TO RES***

District: **05 - CLAY-OUTSIDE**
Account No. **6278155**
Ticket No. **16971**
Tax Year **2019**

Amount Exonerated: $ 310.78

_____
PRESENT: Prosecuting Attorney
(or)

_____
PRESENT: Tax Commissioner

_____
ATTEST: County Clerk

ASSESSOR

_____

_____
APPROVED: President, County Commission

ORDER ENTERED TO STATE AUDITOR

_____

RE 187

EXONERATIONS

STATE OF WEST VIRGINIA **COUNTY OF HARRISON**

Real Estate

At a regular term of the County Commission of Harrison County, West Virginia, held at the Courthouse of said County, Commissioners

David Hinkle **Susan J. Thomas** **Patsy Trecost II**

On the 31st day of August, 2022 issued the following order, which was made and entered, to-wit:

Upon application of DMCNEMAR for **VINCENT CHARLES E ETUX (LE) (SARITA L ROBINSON ETVIR)** whose address is, 149 NIXON HOLLOW RD BRIDGEPORT, WV 26330-7128, who proved to the satisfaction of the Commission that said property owner is aggrieved by an erroneous assessment of **28680** on **PT 2.83 AS CUNNINGHAM RUN (VINCENTS RES TAN DWLG)**, Class **3/4** in **CLAY-OUTSIDE**, Harrison County, West Virginia, which should have been assessed at **28680**, Class **2** in and for the year **2020**, resulting in a difference in assessed value of **0**. The Commission therefore, orders that the said applicant be and is hereby exonerated from the said erroneous assessment and from the payment of the taxes so assessed, in and for the year **2020**, if the same has not been paid, and if it has been paid, that the Sheriff refund the same to them.

The commission certifies the following facts upon which it grants said relief:

The above mentioned property is owner occupied by Charles & Patricia Vincent & has been for several years. Robinsons let them have (LE) & reside in the property therefore Class 2 applies. Exonerate a value of 14340 at a Class 3 rate of levy to correct the overcharge. ***PLEASE UPDATE LEGAL FROM RENTAL TO RES***

District: **05 - CLAY-OUTSIDE**
Account No. **6278155**
Ticket No. **17001**
Tax Year **2020**

Amount Exonerated: $ 330.74

_____
PRESENT: Prosecuting Attorney
(or)

_____
PRESENT: Tax Commissioner

_____
ATTEST: County Clerk

ASSESSOR

_____

_____
APPROVED: President, County Commission

ORDER ENTERED TO STATE AUDITOR

_____

RE 188

EXONERATIONS

STATE OF WEST VIRGINIA **COUNTY OF HARRISON**

Real Estate

At a regular term of the County Commission of Harrison County, West Virginia, held at the Courthouse of said County, Commissioners

David Hinkle **Susan J. Thomas** **Patsy Trecost II**

On the 31st day of August, 2022 issued the following order, which was made and entered, to-wit:

Upon application of DMCNEMAR for **VINCENT CHARLES E ETUX (LE) (SARITA L ROBINSON ETVIR)** whose address is, 149 NIXON HOLLOW RD BRIDGEPORT, WV 26330-7128, who proved to the satisfaction of the Commission that said property owner is aggrieved by an erroneous assessment of **29010** on **PT 2.83 AS CUNNINGHAM RUN (VINCENTS RES TAN DWLG)**, Class **3/4** in **CLAY-OUTSIDE**, Harrison County, West Virginia, which should have been assessed at **29010**, Class **2** in and for the year **2021**, resulting in a difference in assessed value of **0**. The Commission therefore, orders that the said applicant be and is hereby exonerated from the said erroneous assessment and from the payment of the taxes so assessed, in and for the year **2021**, if the same has not been paid, and if it has been paid, that the Sheriff refund the same to them.

The commission certifies the following facts upon which it grants said relief:

The above mentioned property is owner occupied by Charles & Patricia Vincent & has been for several years. Robinsons let them have (LE) & reside in the property therefore Class 2 applies. Exonerate a value of 14505 at a Class 3 rate of levy to correct the overcharge. ***PLEASE UPDATE LEGAL FROM RENTAL TO RES***

District: **05 - CLAY-OUTSIDE**
Account No. **6278155**
Ticket No. **16956**
Tax Year **2021**

Amount Exonerated: $ 337.79

_____
PRESENT: Prosecuting Attorney
(or)

_____
PRESENT: Tax Commissioner

_____
ATTEST: County Clerk

ASSESSOR

_____

_____
APPROVED: President, County Commission

ORDER ENTERED TO STATE AUDITOR

_____

RE 189

EXONERATIONS

STATE OF WEST VIRGINIA **COUNTY OF HARRISON**

Real Estate

At a regular term of the County Commission of Harrison County, West Virginia, held at the Courthouse of said County, Commissioners

David Hinkle **Susan J. Thomas** **Patsy Trecost II**

On the 31st day of August, 2022 issued the following order, which was made and entered, to-wit:

Upon application of DMCNEMAR for **VINCENT CHARLES E ETUX (LE) (SARITA L ROBINSON ETVIR)** whose address is, 149 NIXON HOLLOW RD BRIDGEPORT, WV 26330-7128, who proved to the satisfaction of the Commission that said property owner is aggrieved by an erroneous assessment of **29580** on **PT 2.83 AS CUNNINGHAM RUN (VINCENTS RES TAN DWLG)**, Class **3/4** in **CLAY-OUTSIDE**, Harrison County, West Virginia, which should have been assessed at **29580**, Class **2** in and for the year **2022**, resulting in a difference in assessed value of **0**. The Commission therefore, orders that the said applicant be and is hereby exonerated from the said erroneous assessment and from the payment of the taxes so assessed, in and for the year **2022**, if the same has not been paid, and if it has been paid, that the Sheriff refund the same to them.

The commission certifies the following facts upon which it grants said relief:

The above mentioned property is owner occupied by Charles & Patricia Vincent & has been for several years. Robinsons let them have (LE) & reside in the property therefore Class 2 applies. Exonerate a value of 14790 at a Class 3 rate of levy to correct the overcharge. ***PLEASE UPDATE LEGAL FROM RENTAL TO RES***

District: **05 - CLAY-OUTSIDE**
Account No. **6278155**
Ticket No. **17039**
Tax Year **2022**

Amount Exonerated: $ 348.57

PRESENT: Prosecuting Attorney
(or)
PRESENT: Tax Commissioner

APPROVED: President, County Commission

ORDER ENTERED TO STATE AUDITOR

ATTEST: County Clerk

ASSESSOR

PP 237

EXONERATIONS

STATE OF WEST VIRGINIA **COUNTY OF HARRISON**

Personal Property

At a regular term of the County Commission of Harrison County, West Virginia, held at the Courthouse of said County, Commissioners

David Hinkle **Susan J. Thomas** **Patsy Trecost II**

On the 31st day of August, 2022 issued the following order, which was made and entered, to-wit:

Upon application of CRICHARDS for **AYERS APRIL L** whose address is, PO BOX 229 LUMBERPORT, WV 26386, who proved to the satisfaction of the Commission that said property owner is aggrieved by an erroneous assessment of **1740** on **VEHICLES**, Class **3/4** in **EAGLE-LUMBERPORT**, Harrison County, West Virginia, which should have been assessed at **1430**, Class **3/4** in and for the year **2020**, resulting in a difference in assessed value of **310**. The Commission therefore, orders that the said applicant be and is hereby exonerated from the said erroneous assessment and from the payment of the taxes so assessed, in and for the year **2020**, if the same has not been paid, and if it has been paid, that the Sheriff refund the same to them.

The commission certifies the following facts upon which it grants said relief:

The above mentioned taxpayer in error was assessed in District 10, the correct district is 09 but taxes paid. Exonerate a value of 310 at a class 4 rate of levy to correct the overcharge.

District: **10 - EAGLE-LUMBERPORT**
Account No. **3057352**
Ticket No. **10000085**
Tax Year **2020**

Amount Exonerated: $8.70

PRESENT: Prosecuting Attorney
(or)
PRESENT: Tax Commissioner

APPROVED: President, County Commission

ATTEST: County Clerk

ORDER ENTERED TO STATE AUDITOR

ASSESSOR Joseph A Romano

PP 238

EXONERATIONS

STATE OF WEST VIRGINIA **COUNTY OF HARRISON**

Personal Property

At a regular term of the County Commission of Harrison County, West Virginia, held at the Courthouse of said County, Commissioners

David Hinkle **Susan J. Thomas** **Patsy Trecost II**

On the 31st day of August, 2022 issued the following order, which was made and entered, to-wit:

Upon application of CRICHARDS for **AYERS-GILLESPIE APRIL L** whose address is, PO BOX 229 LUMBERPORT, WV 26386, who proved to the satisfaction of the Commission that said property owner is aggrieved by an erroneous assessment of **6285** on **VEHICLES**, Class **3/4** in **EAGLE-LUMBERPORT**, Harrison County, West Virginia, which should have been assessed at **5166**, Class **3/4** in and for the year **2020**, resulting in a difference in assessed value of **1119**. The Commission therefore, orders that the said applicant be and is hereby exonerated from the said erroneous assessment and from the payment of the taxes so assessed, in and for the year **2020**, if the same has not been paid, and if it has been paid, that the Sheriff refund the same to them.

The commission certifies the following facts upon which it grants said relief:

The above mentioned taxpayer in error was assessed in District 10, the correct district is 09 but taxes paid. Exonerate a value of 1119 at a class 4 rate of levy to correct the overcharge.

District: **10 - EAGLE-LUMBERPORT**
Account No. **3057352**
Ticket No. **815445**
Tax Year **2020**

Amount Exonerated: $31.40

PRESENT: Prosecuting Attorney
(or)

PRESENT: Tax Commissioner

ATTEST: County Clerk

ASSESSOR Joseph A Romano

APPROVED: President, County Commission

ORDER ENTERED TO STATE AUDITOR

PP 239

EXONERATIONS

STATE OF WEST VIRGINIA **COUNTY OF HARRISON**

Personal Property

At a regular term of the County Commission of Harrison County, West Virginia, held at the Courthouse of said County, Commissioners

David Hinkle **Susan J. Thomas** **Patsy Trecost II**

On the 31st day of August, 2022 issued the following order, which was made and entered, to-wit:

Upon application of CRICHARDS for **AYERS-GILLESPIE APRIL L** whose address is, PO BOX 229 LUMBERPORT, WV 26386, who proved to the satisfaction of the Commission that said property owner is aggrieved by an erroneous assessment of **6900** on **VEHICLES**, Class **3/4** in **EAGLE-LUMBERPORT**, Harrison County, West Virginia, which should have been assessed at **5682**, Class **3/4** in and for the year **2021**, resulting in a difference in assessed value of **1218**. The Commission therefore, orders that the said applicant be and is hereby exonerated from the said erroneous assessment and from the payment of the taxes so assessed, in and for the year **2021**, if the same has not been paid, and if it has been paid, that the Sheriff refund the same to them.

The commission certifies the following facts upon which it grants said relief:

The above mentioned taxpayer in error was assessed in District 10, the correct district is 09 but taxes paid. Exonerate a value of 1919 at a class 4 rate of levy to correct the overcharge.

District: **10 - EAGLE-LUMBERPORT**
Account No. **3057352**
Ticket No. **10000071**
Tax Year **2021**

Amount Exonerated: $34.45

PRESENT: Prosecuting Attorney
(or)

PRESENT: Tax Commissioner

APPROVED: President, County Commission

ORDER ENTERED TO STATE AUDITOR

ATTEST: County Clerk

ASSESSOR

PP 240

EXONERATIONS

STATE OF WEST VIRGINIA **COUNTY OF HARRISON**

Personal Property

At a regular term of the County Commission of Harrison County, West Virginia, held at the Courthouse of said County, Commissioners

David Hinkle **Susan J. Thomas** **Patsy Trecost II**

On the 31st day of August, 2022 issued the following order, which was made and entered, to-wit:

Upon application of CRICHARDS for **GILES GREGORY GORDON & CAROL T** whose address is, 3006 DOGWOOD RD BRIDGEPORT, WV 26330, who proved to the satisfaction of the Commission that said property owner is aggrieved by an erroneous assessment of **17313** on **2011 Cadillac SRX**, Class **3/4** in **SIMPSON-BRIDGEPORT**, Harrison County, West Virginia, which should have been assessed at **13248**, Class **3/4** in and for the year **2021**, resulting in a difference in assessed value of **4065**. The Commission therefore, orders that the said applicant be and is hereby exonerated from the said erroneous assessment and from the payment of the taxes so assessed, in and for the year **2021**, if the same has not been paid, and if it has been paid, that the Sheriff refund the same to them.

The commission certifies the following facts upon which it grants said relief:

The above mentioned taxpayer in error reported the 2011 Cadillac, the vehicle was traded for the 2016 Cadillac also reported. Exonerate a value of 6775 at a class 4 rate of levy to correct the overcharge. Please remove the 11 Cadi SRX- (6775) from the vehicle description.

District: **16 - SIMPSON-BRIDGEPORT**
Account No. **3004032**
Ticket No. **922536**
Tax Year **2021**

Amount Exonerated: $123.80

PRESENT: Prosecuting Attorney
(or)
PRESENT: Tax Commissioner

APPROVED: President, County Commission

ORDER ENTERED TO STATE AUDITOR

ATTEST: County Clerk

ASSESSOR

PP 241

EXONERATIONS

STATE OF WEST VIRGINIA **COUNTY OF HARRISON**

Personal Property

At a regular term of the County Commission of Harrison County, West Virginia, held at the Courthouse of said County, Commissioners

David Hinkle **Susan J. Thomas** **Patsy Trecost II**

On the 31st day of August, 2022 issued the following order, which was made and entered, to-wit:

Upon application of CRICHARDS for **GILLESPIE DAVID E** whose address is, 62 COTTRILL LN LUMBERPORT, WV 26386, who proved to the satisfaction of the Commission that said property owner is aggrieved by an erroneous assessment of **6750** on **VEHICLES**, Class **3/4** in **EAGLE-LUMBERPORT**, Harrison County, West Virginia, which should have been assessed at **5547**, Class **3/4** in and for the year **2020**, resulting in a difference in assessed value of **1203**. The Commission therefore, orders that the said applicant be and is hereby exonerated from the said erroneous assessment and from the payment of the taxes so assessed, in and for the year **2020**, if the same has not been paid, and if it has been paid, that the Sheriff refund the same to them.

The commission certifies the following facts upon which it grants said relief:

The above mentioned taxpayer in error was assessed in District 10, the correct district is 09 but taxes paid. Exonerate a value of 1203 at a class 4 rate of levy to correct the overcharge.

District: **10 - EAGLE-LUMBERPORT**
Account No. **3011271**
Ticket No. **815537**
Tax Year **2020**

Amount Exonerated: $33.76

PRESENT: Prosecuting Attorney
(or)
PRESENT: Tax Commissioner

APPROVED: President, County Commission

ORDER ENTERED TO STATE AUDITOR

ATTEST: County Clerk

ASSESSOR Joseph A Romano

PP242

EXONERATIONS

STATE OF WEST VIRGINIA **COUNTY OF HARRISON**

Personal Property

At a regular term of the County Commission of Harrison County, West Virginia, held at the Courthouse of said County, Commissioners

David Hinkle **Susan J. Thomas** **Patsy Trecost II**

On the 31st day of August, 2022 issued the following order, which was made and entered, to-wit:

Upon application of CRICHARDS for **GILLESPIE DAVID E** whose address is, 62 COTTRILL LN LUMBERPORT, WV 26386, who proved to the satisfaction of the Commission that said property owner is aggrieved by an erroneous assessment of **5850** on **VEHICLES**, Class **3/4** in **EAGLE-LUMBERPORT**, Harrison County, West Virginia, which should have been assessed at **4816**, Class **3/4** in and for the year **2021**, resulting in a difference in assessed value of **1034**. The Commission therefore, orders that the said applicant be and is hereby exonerated from the said erroneous assessment and from the payment of the taxes so assessed, in and for the year **2021**, if the same has not been paid, and if it has been paid, that the Sheriff refund the same to them.

The commission certifies the following facts upon which it grants said relief:

The above mentioned taxpayer in error was assessed in District 10, the correct district is 09 but taxes paid. Exonerate a value of 1119 at a class 4 rate of levy to correct the overcharge.

District: **10 - EAGLE-LUMBERPORT**
Account No. **3011271**
Ticket No. **100000087**
Tax Year **2021**

Amount Exonerated: $29.25

PRESENT: Prosecuting Attorney
(or)
PRESENT: Tax Commissioner

APPROVED: President, County Commission

ATTEST: County Clerk

ORDER ENTERED TO STATE AUDITOR

ASSESSOR Joseph A Leonard

PP 243

EXONERATIONS

STATE OF WEST VIRGINIA **COUNTY OF HARRISON**

Personal Property

At a regular term of the County Commission of Harrison County, West Virginia, held at the Courthouse of said County, Commissioners

David Hinkle **Susan J. Thomas** **Patsy Trecost II**

On the 31st day of August, 2022 issued the following order, which was made and entered, to-wit:

Upon application of CRICHARDS for **MARTIN JAMES A** whose address is, 351 HICKMAN ST CLARKSBURG, WV 26301, who proved to the satisfaction of the Commission that said property owner is aggrieved by an erroneous assessment of **8125** on **1995 GMC VANDURA**, Class **3/4** in **CLARK-CLARKSBURG**, Harrison County, West Virginia, which should have been assessed at **2162**, Class **3/4** in and for the year **2022**, resulting in a difference in assessed value of **5963**. The Commission therefore, orders that the said applicant be and is hereby exonerated from the said erroneous assessment and from the payment of the taxes so assessed, in and for the year **2022**, if the same has not been paid, and if it has been paid, that the Sheriff refund the same to them.

The commission certifies the following facts upon which it grants said relief:

The above mentioned taxpayer in error was assessed at an incorrect value for the 1995 GMC, the correct value should be 662 not 6625. Exonerate a value of 5963 at a class 4 rate of levy to correct the overcharge.

District: **03 - CLARK-CLARKSBURG**
Account No. **3069626**
Ticket No. **504150**
Tax Year **2022**

Amount Exonerated: $185.26

PRESENT: Prosecuting Attorney
(or)
PRESENT: Tax Commissioner

APPROVED: President, County Commission

ORDER ENTERED TO STATE AUDITOR

ATTEST: County Clerk

ASSESSOR

6-B
Exhibit B

Exhibit B Corrective Tickets

PP 84 AYERS-GILLESPIE, APRIL L.

RE 127 ROBINSON, WARREN T.

PP84

CORRECTIVE TICKET

STATE OF WEST VIRGINIA **COUNTY OF HARRISON**

Personal Property

At a regular term of the County Commission of Harrison County, West Virginia, held at the Courthouse of said County, Commissioners

David Hinkle **Susan J. Thomas** **Patsy Trecost II**

On the 31st day of August, 2022 issued the following order, which was made and entered, to-wit:

Upon application of CRICHARDS for **AYERS-GILLESPIE APRIL L** whose address is, PO BOX 229 LUMBERPORT, WV 26386, who proved to the satisfaction of the Commission that said property owner is aggrieved by an erroneous assessment of **6900** on **VEHICLES**, Class 3/4 in **EAGLE-LUMBERPORT**, Harrison County, West Virginia, which should have been assessed at **6900**, in and for the year **2022**. The Commission therefore, orders that the said applicant be and is hereby exonerated from the said erroneous assessment and from the payment of the taxes so assessed, and that a corrected assessment and the payment of the correct taes so assessed in and for the year **2022**, as described below, be so ordered.

The commission certifies the following facts upon which it grants said relief:

The above mentioned taxpayer in error was assessed in District 10, the correct District is 09. Create a ticket value of 6900 at a class 3 rate of levy to properly assess and allow discount/half year payments as afforded all taxpayers. District change only correct District is 09.

District **10 - EAGLE-LUMBERPORT**
Account No. **3057352**
Ticket No. **514829**
Tax Year **2022**

Amount Exonerated: **$197.12**
Corrected Ticket Amount: **$ 162.62**
TIF: #

PRESENT: Prosecuting Attorney
(or)
PRESENT: Tax Commissioner

APPROVED: President, County Commission

ATTEST: County Clerk

ORDER ENTERED TO STATE AUDITOR

ASSESSOR

RE 127

CORRECTIVE TICKET

STATE OF WEST VIRGINIA **COUNTY OF HARRISON**

Real Estate

At a regular term of the County Commission of Harrison County, West Virginia, held at the Courthouse of said County, Commissioners

David Hinkle **Susan J. Thomas** **Patsy Trecost II**

On the 31st day of August, 2022 issued the following order, which was made and entered, to-wit:

Upon application of DMCNEMAR for **ROBINSON WARREN T** whose address is, 212 MEADOWLARK LN LUMBERPORT, WV 26386, who proved to the satisfaction of the Commission that said property owner is aggrieved by an erroneous assessment of **1510** on **1/2 INT 1 GAS WELL LIBERTY (CONS/LS #52718-API #1537)**, Class 3/4 in **COAL-OUTSIDE**, Harrison County, West Virginia, which should have been assessed at **200**, in and for the year **2022**. The Commission therefore, orders that the said applicant be and is hereby exonerated from the said erroneous assessment and from the payment of the taxes so assessed, and that a corrected assessment and the payment of the correct taxes so assessed in and for the year **2022**, as described below, be so ordered.

The commission certifies the following facts upon which it grants said relief:

The State Tax Department erroneously did not assess the royalty with the flat rate. Create a ticket value of 200 (M-200) at a Class 3 rate of levy to properly assess and allow discounts and half year payments as afforded all taxpayers.

District **07 - COAL-OUTSIDE**
Account No. **6251076**
Ticket No. **23347**
Tax Year **2022**

Amount Exonerated: **$35.58**
Corrected Ticket Amount: **$ 2.35**
TIF: #

PRESENT: Prosecuting Attorney
(or)
PRESENT: Tax Commissioner

APPROVED: President, County Commission

ORDER ENTERED TO STATE AUDITOR

ATTEST: County Clerk

ASSESSOR

7-A

REQUISITION FOR PAYMENT FROM
SERIES 2019 C EXCISE TAX BONDS PROJECT FUND

$17,600,000
The County Commission of Harrison County
Junior Subordinate Special District Excise Tax Revenue and Improvement Bonds,
Series 2019 C
(Charles Pointe Economic Opportunity Development District)

REQUISITION FOR PAYMENT NO. 35

The County Commission of Harrison County, a public corporation and governing body of Harrison County, a political subdivision of the State of West Virginia (the "Issuer"), the Charles Pointe Economic Opportunity Development District Board (the "District Board") and Genesis Partners, Limited Partnership, a West Virginia limited partnership (the "Developer") by their duly Authorized Officers, hereby certify, in connection with this Requisition for Payment from Series 2019 C Excise Tax Bonds Project Fund (the "Requisition") under an Indenture of Trust, dated as of August 16, 2019 (the "Original Indenture"), between the Issuer and Wilmington Trust, N.A. ("Wilmington Trust"), a First Supplemental Indenture of Trust for the above captioned Bonds (the "Series 2019 C Excise Tax Bonds"), dated as of August 16, 2019 (the "First Supplemental Indenture" and together with the Original Indenture, the "Indenture") between the Issuer and Wilmington Trust, a Development Agreement, dated August 16, 2019 (the "Development Agreement"), by and among the Issuer, the Developer, the District Board and Charles Pointe Crossing, LLC (the "Site Developer"), and an Instrument of Removal, Acceptance and Appointment, dated June 21, 2022, and made effective as of July 15, 2022, by and between Issuer and Wilmington Trust, wherein UMB Bank, N.A. (the "Trustee") was named as successor trustee, that:

1. Terms used herein and not otherwise defined herein shall have the meanings given such terms in the Indenture and in the Development Agreement.

2. This Requisition requests credit for Costs of the Project previously paid by the Developer or the Site Developer for a portion of the principal amount and purchase price of the Series 2019 C Excise Tax Bonds for a cost which constitutes an allowable expenditure under the EODD Act, the Project Plan, the Indenture and the Development Agreement.

3. The total amount requested to be credited to the purchase price of the Series 2019 C Excise Tax Bonds pursuant to this Requisition is $320,000.00 as more particularly described in **Schedule I** attached hereto and made a part hereof. The amounts set forth herein and in **Schedule I** attached hereto are supported by the attached copies of invoices or statements.

IN WITNESS WHEREOF, this Requisition has been duly executed by the Issuer, by the District Board and by the Developer by their duly Authorized Officers this _____ _____, 2022.

THE COUNTY COMMISSION OF
HARRISON COUNTY

By: _____
Its President

CHARLES POINTE ECONOMIC OPPORTUNITY
DEVELOPMENT DISTRICT BOARD

By: _____
Its Chairman

GENESIS PARTNERS, LIMITED PARTNERSHIP

By: Realcom, Inc., its Managing General Partner

By: _____
James A. Corton, President of Realcom, Inc.

RESIDENT PROJECT REPRESENTATIVE'S CERTIFICATE

Robert F. Stuart, Director of Planning/Engineering, Genesis Partners, Limited Partnership, as Resident Project representative for the Residual Project, hereby certifies that the portion of the Project Plan for which payment has been made by Developer or Site Developer and which is requested to be credited to a portion of the principal amount and purchase price of the Series 2019 C Excise Tax Bonds has been constructed in accordance with the plans and specifications therefore and such costs have not been the subject of a previous requisition by the District Board and the Developer.

RESIDENT PROJECT REPRESENTATIVE

By: _____
Name: Robert F. Stuart
Title: Resident Project Representative

Schedule I
to Requisition

CREDIT FOR COSTS OF THE PROJECT PAID
BY DEVELOPER OR SITE DEVELOPER

(1) Total Amount of credit requested pursuant to this Requisition: $320,000.00

(2) Costs of the Project Paid by Developer or Site Developer:

	Vendor	Description of Expense	Date of Payment	Amount
1.	Genesis Partners, Limited Partnership	Project Management Services	August 22, 2022	$320,000.00
2.				
3.				
TOTAL				$320,000.00

The items listed as having been paid by the Developer or Site Developer are supported by the attached copies of invoices or statements and proof of payment.

Schedule I
to Requisition
(continued)

Copies of Invoices or Statements
and Proof of Payment by Developer or Site Developer
(Attached)

Genesis Partners, Limited Partnership

Bridgeport, WV 26330

Invoice

Date	Invoice #
8/22/2022	35

Bill To
Charles Pointe Economic Opportunity Dev. % Harrison County Commission 301 W. Main St. Clarksburg, WV 26301

P.O. No.	Terms	Project
	Net 30	

Quantity	Description	Rate	Amount
	RFP #35 Developer Reimbursements	320,000.00	320,000.00
		Total	$320,000.00

Developer Reimbursements

Date of Invoice/Statement	Date Paid	Check #	Payee	$
8/22/2019	8/22/2019	7684	Greer Law Offices	$ 40,000.00
Bank - 9/2/2019	8/27/2019	Wire	Transfer to Corban Capital	$ 230,000.00
9/12/2019	11/14/2019	7736	Petroplus & Associates, Inc.	$ 50,000.00
				$ 320,000.00

Greer Law Office, PLLC

Receipt No.: 1193

439 West Philadelphia Avenu
Bridgeport WV
26330

Receipt Of Payment

Thursday, 22 August2019 ***$40,000.00***

Amount: *** ***Forty Thousand*** ********** ***00/100***

From: Ann's Run LLC

Matter: 3587.0002
RE: 2019 Charles Pointe Crossing Title

WV

Into Account: GEN 1

Client Name: ***Corban Capital Partners***

Signature _____

Greer Law Office, PLLC
439 West Philadelphia Avenue
Bridgeport, WV 26330

Ph:(304) 842-8090 Fax:(304) 842-8091

Corban Capital Partners
WV
USA

August 22, 2019

File #: 3587.0002
Inv #: 20529

Attention:

RE: 2019 Charles Pointe Crossing Title Exam And Document Review

DATE	DESCRIPTION	HOURS	AMOUNT	LAWYER
Feb-26-19	Attention to title opinions	0.75	187.50	RG
Feb-27-19	Call from Christie; attention to e-mail from Kraig; release reports to Kraig	1.10	275.00	RG
Apr-02-19	Phone call from Presana Mahdua re updates title opinions	0.50	125.00	RG
Apr-03-19	Exchange e-mail with NY counsel; attention to title work	0.80	200.00	RG
	Update title opinions multiple parcels	3.00	750.00	RG
Apr-10-19	Research Tax issue, revise title opinions; call from borrowers counsel re ALTA survey	2.25	562.50	RG
Apr-12-19	Review and respond to e-mail re survey, call to Miller re Alta survey with follow up e-mail; title exam, partial, 270-25	5.50	1,375.00	RG
Apr-15-19	Complete title examination 270/30 & 270/30.1;	2.25	562.50	RG
Apr-16-19	Revise title opinions; review e-mail from Miller re survey	1.50	375.00	RG
Apr-18-19	Review and respond to e-mail re engagement	0.25	62.50	RG

May-01-19	Attention to ALTA Survey and meeting re 95 ac plat	2.00	500.00	RG
May-02-19	Attention to title issues; call with Rebecca attend trial ORNT	2.50	625.00	RG
May-03-19	Attention to e-mail and telephone calls re survey and title commitment	3.00	750.00	RG
May-06-19	Attention to title commitment	2.50	625.00	RG
May-10-19	Review and revise Title Commitment	3.00	750.00	RG
	Attention to Title Commitment	1.00	250.00	RG
	Revise Title commitment; call with underwriter; respond to e-mail	2.25	562.50	RG
May-13-19	Attention to survey needs,	0.50	125.00	RG
May-14-19	Review Title Commitment; e-mail to client	0.75	187.50	RG
May-15-19	Attention to documents and hyper link issue	11.00	2,750.00	RG
May-16-19	Review and revise title commitment; meeting with CEC; courthouse work.	11.00	2,750.00	RG
	Review and revise title commitment; meeting with surveyors; courthouse work	5.50	1,375.00	RG
May-17-19	Review and revise title commitment; attention to property references and links; call from Christie re taxes	8.00	2,000.00	RG
May-18-19	Organize supporting documents	1.50	375.00	RG
	Download and matching of documents for Title Commitment	3.50	875.00	RG
May-19-19	Download and matching of documents for Title Commitment	6.50	1,625.00	RG
May-20-19	Complete download and matching of documents for Title Commitment	4.50	1,125.00	RG
May-22-19	Call from Gray re survey status; message to Ellis at ORNT, Call with Kraig re status	0.60	150.00	RG

May-23-19	Exchange e-mail re survey and status; research survey; calls with Kraig re	2.00	500.00	RG
May-24-19	Discussion with CEC. review ALTA survey; email same to cleints	1.00	250.00	RG
May-27-19	Track down missing deed restriction documents	2.75	687.50	RG
May-28-19	Proof Read Commitment exchange e-mail with ORNT	0.75	187.50	RG
May-29-19	Exchange email re committment; research legal question for ORNT	1.75	437.50	RG
May-30-19	Attention to title issue, survey and research missing order	1.75	437.50	RG
Jun-03-19	Respond to e-mail from Prassana re commitment	0.25	62.50	RG
Jun-06-19	Review e-mail; Call with Christie	0.50	125.00	RG
Jul-24-19	Call from Craig Danielson re status	0.50	125.00	RG
Jul-25-19	E-mail Old republic and CEC re possibility of new activity	0.50	125.00	RG
Aug-26-19	W/O per RLG	0.00	-4,488.03	RG
	Totals	99.25	$20,324.47	

DISBURSEMENTS

Apr-15-19	Photocopy Expense Copies deeds, deed of trust, redemption book documents, will in Harrison County	142.50
May-30-19	Postage Expense Mail Tube and Fed Ex to P. Mahadeva with ALTA draft	35.03
Jun-04-19	Photocopy Expense in Harrison County	6.00
Jun-05-19	ALTA Survey Services by Civil & Environmental Consultants,Inc	18,500.00
Jun-07-19	Photocopy Expense Deeds in Harrison County	992.00
	Totals	$19,675.53
	Total Fee & Disbursements	**$40,000.00**

	Retainers Applied	40,000.00
	Balance Now Due	**$0.00**

PAYMENT DETAILS

Aug-22-19	Thank You for your payment Check #7684	40,000.00
	Total Payments	**$40,000.00**

PREMIER BANK

Current Date:	June 28, 2021
Account Number:	1300101936
Capture Date:	August 23, 2019
Item Number:	5257071675477
Posted Date:	August 23, 2019
Posted Item Number:	600628
Amount:	40,000.00
Record Type:	Debit

ANNS RUN LLC
PO BOX 1000
BRIDGEPORT WV 26330

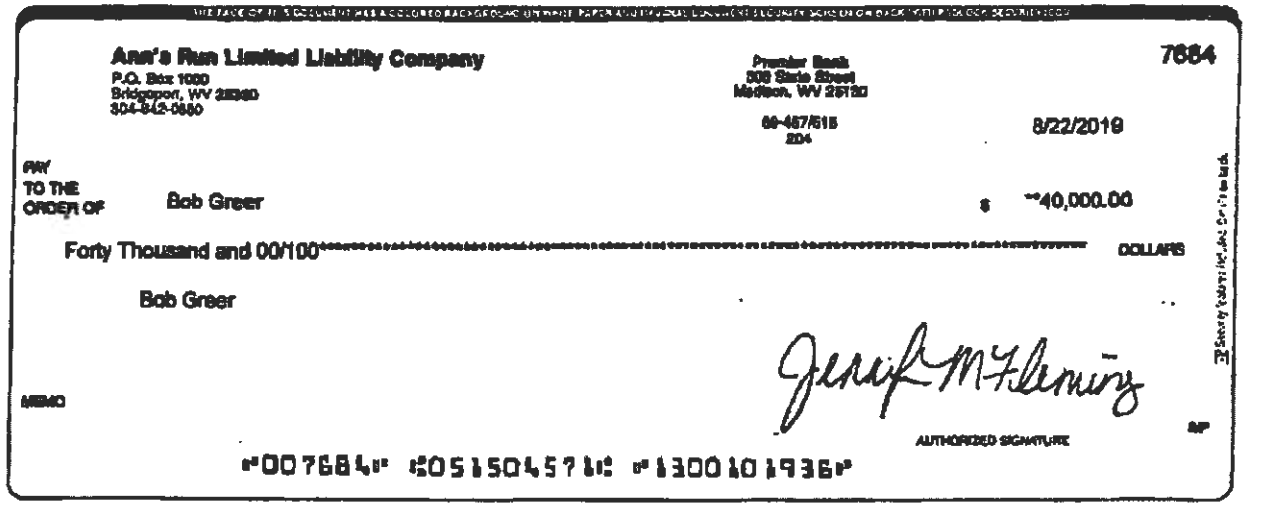

Ann's Run Limited Liability Company
P.O. Box 1000
Bridgeport, WV 26330
304-842-0660

Premier Bank
300 State Street
Madison, WV 25130

69-467/515
204

7684

8/22/2019

PAY TO THE ORDER OF Bob Greer $ **40,000.00

Forty Thousand and 00/100********** DOLLARS

Bob Greer

MEMO

AUTHORIZED SIGNATURE

⑈007684⑈ ⑆051504571⑆ ⑈1300101936⑈

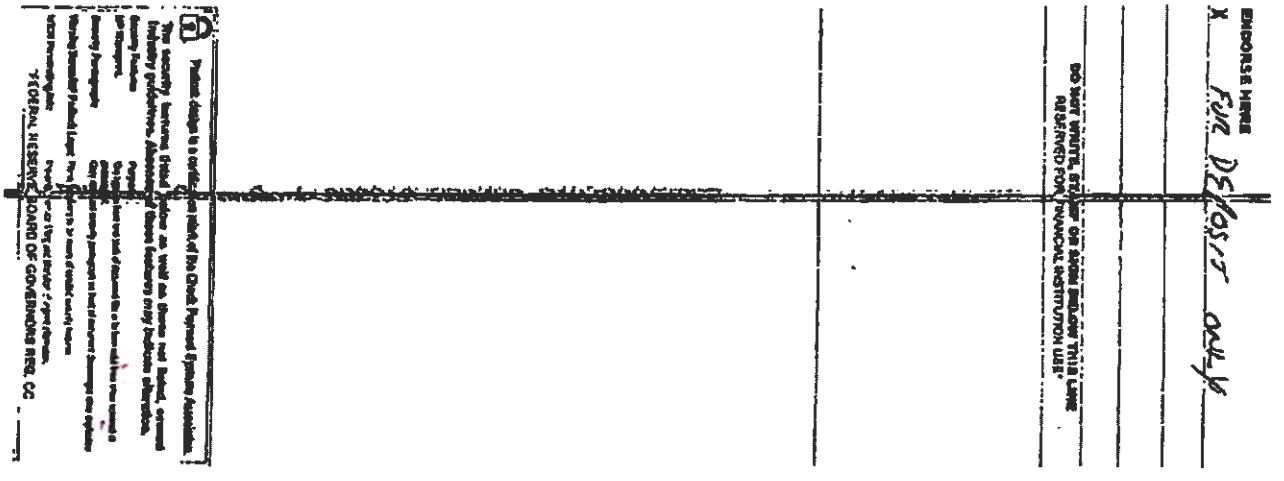

ENDORSE HERE
X For Deposit only

DO NOT WRITE, STAMP OR APPLY LABELS IN THIS SPACE
RESERVED FOR FINANCIAL INSTITUTION USE

Please design to comply with the Board of Governors Check Payment Systems Association
The security features listed below are used in Check Payment Systems Association
Industry publications. Absence of these features may indicate alteration.

FEDERAL RESERVE BOARD OF GOVERNORS REG. CC

PREMIER BANK

Premier Bank First Central
25 Oakmont Lane
Bridgeport WV 26330
(304)842-1887

ANNS RUN LLC
PO BOX 1000
BRIDGEPORT WV 26330-0913

Account Number: 1300101936
Date 09/02/19
Images: 29

ANNS RUN LLC	PREMIER SMALL BUSINESS	Acct 1300101936

Summary of Activity Since Your Last Statement

	Beginning Balance	8/01/19	10,913.05
	Deposits / Misc Credits	7	1,945,253.72
	Withdrawals / Misc Debits	40	1,666,040.08
**	Ending Balance	8/31/19	290,126.69
	Service Charge		.00
	Average Balance		431,561
	Minimum Balance		2,058
	Enclosures		29

Deposits and Other Credits

Date	Amount	Activity Description
8/07	55,000.00	Deposit# 000001300101936
8/09	61,157.44	WIRE IN SOMERSET TRUST COMPANY
8/13	6,324.15	DEPOSIT
8/16	715,787.99	WIRE IN COUNTY COMMISSION HARRISON CO
8/16	1,036,433.39	WIRE IN COUNTY COMMISSION OF HARRISON CO
8/22	35,000.00	WIRE IN FIRST AMERICAN TITLE INSURANCE
8/22	35,550.75	WIRE IN FIRST AMERICAN TITLE INSURANCE

Checks

Date	Check No	Amount	Date	Check No	Amount	Date	Check No	Amount
8/01	7655	256.80	8/20	7666	9,335.24	8/21	7677*	60,267.12
8/02	7656	1,613.81	8/21	7667	9,902.79	8/20	7678	169,252.06
8/02	7657	3,584.30	8/21	7668	86,629.21	8/20	7679	546,535.93
8/06	7659*	1,400.00	8/29	7669	1,442.50	8/27	7680	25,000.00
8/07	7660	57,000.00	8/26	7670	1,167.12	8/21	7681	2,300.00
8/13	7661	50,647.98	8/22	7671	8.33	8/21	7682	35,000.00
8/16	7662	1,170.00	8/26	7672	717.20	8/23	7683	76,000.00
8/16	7663	30.00	8/19	7673	45,000.00	8/23	7684	40,000.00
8/20	7664	2,789.43	8/20	7674	155,000.00	8/28	7688*	12,500.00
8/21	7665	21,065.15	8/23	7675	195.96			

* Indicates a break in check number sequence

FDIC

BOONE DIVISION
500 STATE STREET
MADISON, WV 25130
PH: 304-369-8407

FIRST CENTRAL DIVISION
2 SOUTH MAIN STREET
PHILIPPI, WV 26416
PH: 304-457-3739

TRADERS DIVISION
601 WASHINGTON STREET
RAVENSWOOD, WV 26164
PH: 304-273-1100

WASHINGTON DIVISION
1130 CONNECTICUT AVENUE
WASHINGTON, DC 20036
PH: 202-772-3600

CONSOLIDATED DIVISION
320 NORTH FIRST STREET
RICHMOND, VA 23219
PH: 804-771-5200

EQUAL HOUSING LENDER

PREMIER BANK

Debits and Other Withdrawals

Account Number: 1300101936

Date	Amount	Activity Description
8/09	15.00	Wire Transfer Incoming
8/16	15.00	Wire Transfer Incoming
8/16	15.00	Wire Transfer Incoming
8/21	18.45	WVTREASURY/WVTAXPAYPB ANNS RUN LIMITED LIABI
8/21	110.70	WVTREASURY/WVTAXPAYPB ANNS RUN LIMITED LIABI
8/22	15.00	Wire Transfer Incoming
8/22	15.00	Wire Transfer Incoming
8/27	230,000.00	WIRE TRANFER DEBIT
8/27	25.00	Wire Transfer Outgoing
8/29	19,975.00	WIRE TRANFER DEBIT
8/29	25.00	Wire Transfer Outgoing

Daily Balance Summary

Date	Balance	Date	Balance	Date	Balance
8/01	10,656.25	8/16	1,769,868.13	8/26	579,094.19
8/02	5,458.14	8/19	1,724,868.13	8/27	324,069.19
8/06	4,058.14	8/20	841,955.47	8/28	311,569.19
8/07	2,058.14	8/21	626,662.05	8/29	290,126.69
8/09	63,200.58	8/22	697,174.47		
8/13	18,876.75	8/23	580,978.51		

SETTLEMENT AGREEMENT AND MUTUAL RELEASES

THIS SETTLEMENT AGREEMENT AND MUTUAL RELEASES ("Agreement"), made and effective the 27th day of August, 2019, by and between **CHARLES POINTE CROSSING, LLC**, a West Virginia limited liability company ("CPC"), and **CORBAN CAPITAL PARTNERS, LLC**, a limited liability company ("Corban").

WHEREAS, by Summary of Terms, dated January 28, 2019, the parties entered into an expression of interest, and not a commitment to lend, to fund in the amount of $24,600,000 (the "Construction Loan") grading and construction costs at Charles Pointe, Bridgeport, West Virginia, subject to certain contingencies, including, but not limited to, the issuance and funding of the Series 2019 Charles Pointe Economic Opportunity Development District Excess Tax Revenue Bonds (the "Bonds");

WHEREAS, the Bonds were issued without the need for the Loan;

WHEREAS, the parties have negotiated a break-up fee to be paid Corban by CPC for work and expenses incurred by Corban and its lending source, Silver Point Finance, LLC, and their legal, financial and other representatives (collectively, Supporting Parties") during the period leading up to the issuance of the Bonds (said Supporting Parties shall not include parties not directly engaged by Corban or its direct affiliates).

NOW, THEREFORE, for and in consideration of Ten Dollars ($10.00), the terms and conditions of this Agreement, and other good and valuable consideration, the receipt and sufficiency of which are hereby confirmed, the parties agree as follows:

1. As a negotiated break-up fee covering all costs, expense and efforts by Corban and its Supporting Parties, CPC agrees to pay (a) Corban the sum of $230,000.00 ("Settlement Amount"), payable by wire pursuant to wire instructions provided by Corban, and (b) Robert L. Greer, Greer Law Office, the sum of $40,000.00, representing title work and expenses incurred through Civil and Environmental Consultants (CEC) for an ALTA Survey.

2. Excepting the amount to be paid directly to Greer Law Office by CPC, Corban agrees to pay all outstanding costs and expenses due any Supporting Party from the Settlement Amount.

3. Corban does hereby fully release and discharge CPC, and its respective members, officers, directors, employees, agents and successors and assigns, and any other person claiming by or through them, from any and all claims, liabilities, debts, causes of action, suits, damages, liens, encumbrances, costs, expenses, attorneys' fees and expenses, and demands of any kind or nature whatsoever, at law or in equity, whether known, unknown, direct, indirect, contingent, matured, un-matured, disputed or undisputed, now and in the future, arising from or related to the Summary of Terms and all duties and activities of Corban thereunder, excepting CPC's obligations under this Agreement.

4. CPC does hereby fully release and discharge Corban, and its respective members, officers, directors, employees, agents and successors and assigns, and any other person claiming by or through them, from any and all claims, liabilities, debts, causes of action, suits, damages, liens, encumbrances, costs, expenses, attorneys' fees and expenses, and demands of any kind or nature whatsoever, at law or in equity, whether known, unknown, direct, indirect, contingent, matured, un-matured, disputed or undisputed, now and in the future, arising from or related to the Summary of Terms and all duties and activities of CPC thereunder, excepting Corban's obligations under this Agreement.

5. Each party represents and warrants that it has full authority to enter into this Agreement and to undertake the obligations created herein.

6. Corban agrees to indemnify and hold barmless CPC, and its members, directors, officers, employees, agents and successors and assigns, from any and all claims, liabilities, debts, causes of action, suits, damages, liens, encumbrances, costs, expenses, attorneys' fees and expenses, and demands of any nature whatsoever, whether at law or in equity, and known or unknown, now and in the future, made by any Supporting Party that arises from or is related in any manner to, the Summary of Terms and any activities and due diligence that may have been performed in furtherance of the Loan

7. The parties understand and agree that this Agreement represents a compromise and settlement of all claims and liabilities relating to the Summary of Terms. All of the parties have had the opportunity to consult with their respective counsel regarding this settlement, and each of them hereby acknowledges that they are voluntarily entering into this Agreement based upon their independent, informed and knowing evaluation of the alternatives of allowing their respective claims, disputes and controversies to be resolved through litigation. Each of the parties acknowledge that they are entering into this Agreement voluntarily, wholly without duress or any coercion whatsoever, and that they are doing so because they have each concluded that it is in their individual best interests to do so.

8. The parties acknowledge that they must keep the terms of this Agreement confidential. Accordingly, they agree not to disclose or publish to any person or entity, except their corporate officers, immediate family members, attorneys or financial professionals, or pursuant to legal process, the terms and conditions or sums being paid in connection with this Agreement. In the event tbat any Party hereto is served with a subpoena or other legal process that would require a disclosure otherwise deemed confidential pursuant to this Agreement, it agrees to provide prompt written notice to the other Parties of its receipt of said subpoena or legal process.

9. This Agreement shall be governed by and construed in accordance with the laws of the State of West Virginia.

10. This Agreement shall inure to the benefit and be binding upon the parties hereto, their respective successors, heirs and/or assigns.

11. This Agreement may be executed in any number of counterparts, each of which shall be deemed an original, but all of which together shall constitute one and the same

instrument. The electronic transmission of any signed original counterpart of this Agreement shall be deemed to be the delivery of an original counterpart of this Agreement.

IN WITNESS WHEREOF, the parties have executed this Agreement effective as of the date first above written.

CHARLES POINTE CROSSING, LLC

By: Realcom, Inc., Manager

By: _____
Jennifer M. Fleming
Vice President

CORBAN CAPITAL PARTNERS, LLC

By: _____
Kraig Danielson
Its: _____

instrument. The electronic transmission of any signed original counterpart of this Agreement shall be deemed to be the delivery of an original counterpart of this Agreement.

IN WITNESS WHEREOF, the parties have executed this Agreement effective as of the date first above written.

CHARLES POINTE CROSSING, LLC

By: Realcom, Inc., Manager

By: _____
Jennifer M. Fleming
Vice President

CORBAN CAPITAL PARTNERS, LLC

By: _____
Kraig Danielson
Its: Managing Director

Petroplus & Associates Inc.
PO Box 679
Morgantown, WV 26507-0679

Invoice

Account: prop - 60 - genisis

Date: 09/12/19

Payment: _____

Genisis Partners
Charles Pointe
Clarksburg, WV

Date	Description	Charges	Balance
09/12/19	Real Estate Services - Menards	50,000.00	50,000.00

Invoice Amount

50,000.00

PREMIER BANK

Current Date:	June 28, 2021
Account Number:	1300101936
Capture Date:	November 18, 2019
Item Number:	5257072053183
Posted Date:	November 18, 2019
Posted Item Number:	202606
Amount:	50,000.00
Record Type:	Debit

ANNS RUN LLC
PO BOX 1000
BRIDGEPORT WV 26330

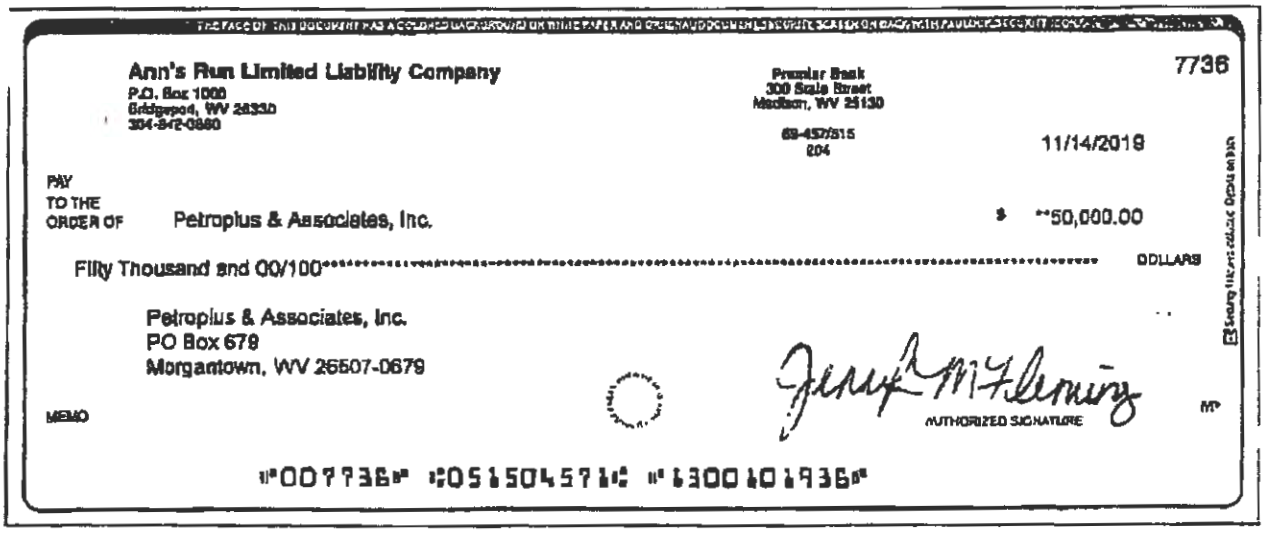

Ann's Run Limited Liability Company
P.O. Box 1000
Bridgeport, WV 26330
304-842-0860

Premier Bank
300 State Street
Madison, WV 25130
69-457/515
204

7736

11/14/2019

PAY TO THE ORDER OF Petroplus & Associates, Inc. $ **50,000.00

Fifty Thousand and 00/100********** DOLLARS

Petroplus & Associates, Inc.
PO Box 679
Morgantown, WV 26507-0679

MEMO

AUTHORIZED SIGNATURE

⑈007736⑈ ⑆051504571⑆ ⑈1300101936⑈

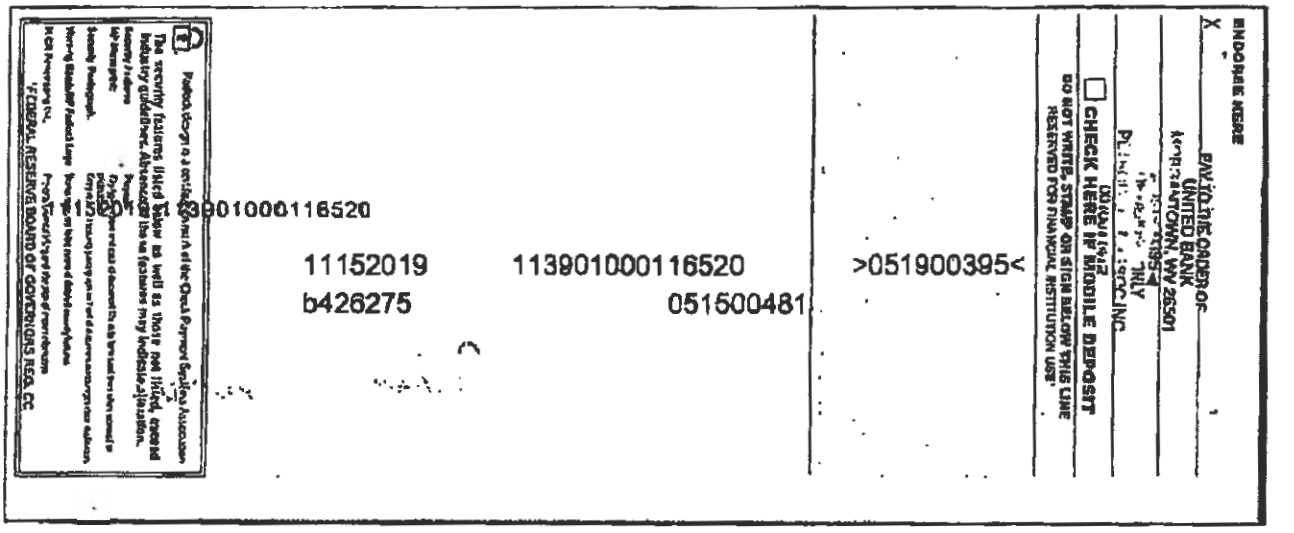

The security features listed below as well as those not listed, exceed industry guidelines. Absence of these features may indicate alteration.

⑆011900395⑆ 113901000116520

11152019 113901000116520 >051900395<
b426275 051500481

ENDORSE HERE

PAY TO THE ORDER OF
UNITED BANK
MORGANTOWN, WV 26501

CHECK HERE IF MOBILE DEPOSIT

DO NOT WRITE, STAMP OR SIGN BELOW THIS LINE
RESERVED FOR FINANCIAL INSTITUTION USE

BONDHOLDER DIRECTION

relating to

The County Commission of Harrison County
Junior Subordinate Special District Excise
Tax Revenue and Improvement Bonds
Series 2019 C
(Charles Pointe Economic Opportunity
Development District)
(the "Bonds")

August _25_, 2022

via email

UMB Bank, N.A., as Successor Trustee
Attention: Gordon Gendler
Gordon.Gendler@UMB.com

Dear Gordon:

The Bonds were issued pursuant to that certain *Indenture of Trust,* as amended and supplemented by that certain *First Supplemental Indenture of Trust,* each by and between The County Commission of Harrison County, West Virginia (the "***Issuer***"), and UMB Bank, N.A., as Successor Trustee (the "***Trustee***") and dated August 16, 2019 (together, the "***Indenture***").[1]

The undersigned represents, warrants, acknowledges and agrees that (i) it is, as of the date hereof, the sole owner of the Bonds; (ii) it has reviewed the documents and matters referenced below and understands the information contained therein and related thereto; (iii) it has such knowledge and experience in business and financial matters as to be capable of evaluating the merits and risks attendant to the prospective effect of this Bondholder Direction; (iv) it has had the opportunity to ask questions and to obtain such information as it has determined to be necessary to enable it to evaluate the merits and risks; and (v) it has independently determined that providing this Bondholder Direction is in the best interests of Bondholder(s) referenced below.

[1] Capitalized terms used and not otherwise defined herein shall have the meanings ascribed to such terms in the Indenture.

BONDHOLDER DIRECTION

The undersigned, by its execution below in the name and on behalf of the undersigned Bondholder, hereby directs UMB Bank, N.A., as Successor Trustee ("***Trustee***") to:

(i) Update the Record of Advances maintained by the Trustee for the Series 2019C Excise Tax Bonds to reflect the funding of a corresponding amount of the purchase price and the drawdown of a corresponding amount of the principal of the Series 2019C Excise Tax Bonds Pay in the amount reflected in Requisition for Payment No. 35, **Attachment A** hereto, in accordance with Section 4.03.A. of the First Supplemental Indenture of Trust; and

(ii) Take any other ancillary action deemed necessary or appropriate by the Trustee in carrying out item (i) above

INDEMNIFICATION

The Bondholder agrees to indemnify and hold the Trustee harmless and defend Trustee from and against any and all Losses incurred by Trustee by reason of or related to Trustee honoring this direction. The term "Losses" includes any losses, liability, claims, damages, costs, and expenses, including attorney's fees, disbursements and court costs reasonably incurred by the Trustee, and the amount of any judgments, fines and other amounts paid in settlement, incurred or suffered by the Trustee in connection with any threatened, pending or adjudicated claim, demand, action, suit or proceeding by any party arising out of or in connection with the Trustee honoring this request and direction. The Bondholder's liability shall be capped at the par amount of the Bonds beneficially owned by the Bondholder. Terms not otherwise defined herein shall have the meaning ascribed thereto in the Indenture. A telecopied, facsimile or scanned signature hereon shall be deemed an original for all purposes.

Charles Pointe Crossing, L.L.C.,
a West Virginia limited liability company

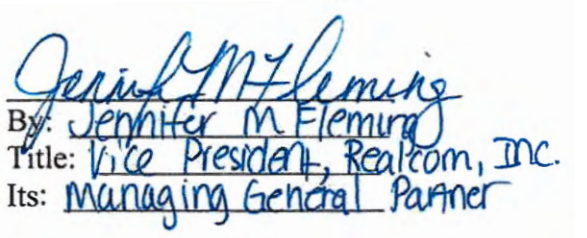
By: Jennifer M. Fleming
Title: Vice President, Realcom, Inc.
Its: Managing General Partner

CC: Gordon Gendler
Gordon.Gendler@UMB.com

EXHIBIT A

BENEFICIAL OWNER INFORMATION BY CUSIP

7-B

FORM OF REQUISITION
FOR PAYMENT FROM SERIES A
ADMINISTRATIVE EXPENSE FUND

The County Commission of Harrison County
(West Virginia)
Tax Increment Revenue and Refunding Bonds
(Charles Pointe Project No. 2- North Land Bay Improvements)
Series 2008 A

To: UMB Bank
120 South Sixth Street Suite 1400
Minneapolis, MN 55402

REQUISITION FOR PAYMENT NO. (08/31/22)

THE COUNTY COMMISSION OF HARRISON COUNTY (the "Issuer"), by its duly Authorized Representatives, hereby certifies, in connection with this Requisition for Payment from Series A Administrative Expense Fund (the "Requisition") under a Development Agreement for the above captioned bonds (the "Series 2008 A Bonds"), dated March 5, 2008 (the "Development Agreement") between the Issuer and the Developer, that:

1. Terms used herein and not otherwise defined herein shall have the meanings given such terms in the Development Agreement or the Indenture of Trust for the Series 2008 A Bonds, dated March 5, 2008 as supplemented and amended (the "Series 2008 A Trust Indenture") between the Issuer and UMB Bank as substitute trustee under the Series 2008 A Trust Indenture.

2. The amount requested to be transferred from the Revenue Fund to the Series A Administrative Expense Fund is necessary to pay Administrative Expenses incurred during the preceding six month period.

3. The amount requested to be disbursed from the Series A Administrative Expense Fund by this Requisition: (a) is a portion of the Administrative Expenses authorized for funding under the Series 2008 A Trust Indenture and Development Agreement, and (b) is an authorized expenditure under the Project Plan and the Act.

4. The total amount requested to be transferred from the Revenue Fund to the Series A Administrative Expense Fund pursuant to this Requisition is **$118.00.**

5. The total amount requested to be disbursed from the Series A Administrative Expense Fund pursuant to this Requisition is **$118.00.** As set forth in the invoices attached hereto, of the total amount of such disbursement:

(a) $ -0- is to be paid to the Developer as reimbursement to the Developer for an invoice or statement previously paid by the Developer to an entity that is not affiliated with the Developer; and

(b) **$118.00** is to be paid to a third party payee that is not affiliated with the Developer or on a joint basis to the Developer and such a third party payee with respect to an expense previously incurred.

In either event, the amount set forth herein is supported by the attached copies of invoices or statements.

IN WITNESS WHEREOF, this Requisition has been duly executed by the Issuer by its duly Authorized Representative this **31st day of August, 2022**.

THE COUNTY COMMISSION OF
HARRISON COUNTY

By: _____
Its President

Schedule I
to Requisition

Copies of Invoices or Statements
(Attached)

Jackson Kelly, PLLC	Invoice #1161890	Dated 08/09/2022	$118.00
		Total	**$118.00**

JACKSONKELLY PLLC
Attorneys at Law
P.O. BOX 45705
BALTIMORE, MD 21297-5705
TELEPHONE 304-340-1000 FAX 304-340-1130
EMPLOYER I.D. NO. 550394215

34382
Charles Pointe Community Enhancement District
c/o Harrison County Commission
Attn: Gina Jones
301 West Main Street
Clarksburg, WV 26301-2974
gjones@harrisoncountywv.gov

August 9, 2022
Invoice No. 1161890

SUMMARY OF OUTSTANDING INVOICES

Total Amount of Current Invoice # 1161890 **$118.00**
Amount of Prior Invoices Outstanding:

INVOICE #	DATE	AMOUNT
1159129	07/07/22	619.50

Total Amount of Prior Invoices Outstanding 619.50

Total Amount Due $737.50

If payment of any prior invoice has already been forwarded, please disregard as to that invoice.

PLEASE RETURN THIS PAGE WITH REMITTANCE

NOTE: This summary page may not include all outstanding invoices. Outstanding invoices for other matters that are separately billed or billed to other contacts will not be reflected on this summary page. Should you have any questions regarding the invoices that appear above please contact JK_Finance@jacksonkelly.com.

PAYMENT DUE September 8, 2022

JACKSONKELLY PLLC
Attorneys at Law
P.O. BOX 45705
BALTIMORE, MD 21297-5705
TELEPHONE 304-340-1000 FAX 304-340-1130
EMPLOYER I.D. NO. 550394215

34382
Charles Pointe Community Enhancement District

August 9, 2022
Invoice No. 1161890

For Legal Services Rendered through July 31, 2022.

Matter 301
TIF Bond Assessments

Date	Timekeeper	Description	Hours	Amount
07/05/22	M. Imbrogno	Finalizing June meeting minutes.	0.30	88.50
07/18/22	M. Imbrogno	Corresponding with county bond counsel regarding landowner notices of assessment.	0.10	29.50
		Total Hours	0.40	
		Services		$118.00
		Total This Matter		$118.00

cc: Laura Pysz
lpysz@harrisoncountywv.gov
cc: Hazel Rader
hrader@harrisoncountywv.com
cc: Michelle Tonkin
mtonkin@harrisoncountywv.gov

If you would prefer to have your invoices emailed or need to update your current email on file, please contact us at JK_Billing@jacksonkelly.com.

PAYMENT DUE September 8, 2022

7-C

REQUISITION FOR PAYMENT FROM ADMINISTRATIVE EXPENSE FUND

$36,500,000
The County Commission of Harrison County
Special District Excise Tax Revenue and Improvement Bonds,
Series 2019 A
(Charles Pointe Economic Opportunity Development District)

$12,280,000
The County Commission of Harrison County
Subordinate Special District Excise Tax Revenue and Refunding Bonds
Series 2019 B
(Charles Pointe Economic Opportunity Development District)

REQUISITION FOR PAYMENT NO. 55 (08/31/22)

The County Commission of Harrison County, a public corporation and governing body of Harrison County, a political subdivision of the State of West Virginia (the "*Issuer*"), by its Authorized Officer, hereby certifies in connection with this Requisition for Payment from Administrative Expense Fund (the "*Requisition*") pursuant to an Indenture of Trust (the "*Indenture*") for the above captioned bonds (the "*Series 2019 Excise Tax Bonds*"), dated as of August 16, 2019, by and between the Issuer and Wilmington Trust, N.A., as trustee, pursuant to which UMB Bank, N.A., serves as successor trustee (the "*Trustee*"), and agreed to by the Charles Pointe Economic Opportunity Development District Board (the "District Board") and pursuant to a Development Agreement for the Series 2019 Excise Tax Bonds, dated as of August 16, 2019 (the "*Development Agreement*") by and among the Issuer, the District Board, Genesis Partners, Limited Partnership, a West Virginia limited partnership (the "*Developer*") and Charles Pointe Crossing, LLC, a West Virginia limited liability company (the "*Site Developer*") that:

1. Terms used herein and not otherwise defined herein shall have the meanings given such terms in the Indenture and in the Development Agreement.

2. The amount requested to be disbursed by this Requisition: (a) is a portion of the Administrative Expenses authorized for funding under the Indenture and Development Agreement, (b) is an authorized expenditure under the Project Plan and the EODD Act, and (c) such requested expenditures, when combined with previous disbursements from the Administrative Expense Fund during the current Bond Year do not exceed $80,000 in the aggregate for such Bond Year.

3. The total amount requested to be disbursed pursuant to this Requisition is **$2,125.00**. As set forth in the invoices attached hereto, of the total amount of such disbursement:

(a) **$ -0-** is to be paid to the Issuer, the District Board, the Developer or Site Developer as reimbursement to the Issuer, the District Board, the Developer or Site

Developer for an invoice or statement previously paid by the Issuer, the District Board, the Developer or the Site Developer; and

(b) **$ 2,125.00** is to be paid to a third party payee that is not affiliated with the Issuer, the District Board, the Developer or the Site Developer or on a joint basis to the Issuer, the District Board, the Developer or the Site Developer and such a third party payee with respect to an expense previously incurred.

In either event, the amount set forth herein is supported by the attached copies of invoices, statements or proof of payment.

IN WITNESS WHEREOF, this Requisition has been duly executed by the Issuer by its Authorized Officer this **31st day of August, 2022.**

THE COUNTY COMMISSION OF
HARRISON COUNTY

By: _____
Its President

Schedule I
to Requisition

Copies of Invoices or Statements
(Attached)

MuniCap, Inc.	Invoice #072022-312	Dated: 07/28/2022	$ 2,125.00
	Total		**$ 2,125.00**

INVOICE

MuniCap, Inc.
Suite 210
8965 Guilford Road
Columbia, MD 21046

Invoice Date	Invoice #
7/28/2022	072022-312

Balance Due $2,125.00

Remit check to: MuniCap, Inc.
8630 M Guilford Road #263
Columbia, MD 21046

or

Wire Instructions:
Our banking info has changed:
Fulton Bank, N.A.
9151 Baltimore National Pike
Ellicott City, MD 21042
(410) 418-8500

ABA Routing No.: 031 301 422
To the account of: MuniCap, Inc.
Account No.: 00 082 362 31

Bill To:
Gina Jones
Director of Grants and Special Proj.
Harrison County Commission
301 West Main St., Fifth Floor
Clarksburg, WV 26301

Project	Charles Pointe 2019	2024

PLEASE DETACH AND RETURN TOP PORTION WITH PAYMENT

Invoice Date	Invoice #
7/28/2022	072022-312

MuniCap, Inc.
Suite 210
8965 Guilford Road
Columbia, MD 21046

Project	Terms	Client #
Charles Pointe 2019	Net 30	2024

Item	DATE	Description	Hrs	Amount
Sr Assoc (SAM)	6/2/2022	Update significant event notice and correspond with the Trustee.	1.75	350.00
Vice Pres (CK)	6/2/2022	Review event notice related to draw on debt service reserve funds and discuss with associate.	1	250.00
Sr Assoc (SAM)	6/3/2022	Update significant event notice pursuant to associate's comments.	0.5	100.00
Sr Assoc (SAM)	6/6/2022	Update, review and provide significant event notices to be posted to EMMA.	0.75	150.00
Sr VP (MD)	6/6/2022	Confirm April balances in QuickBooks and approve final journal entries. Prepare April financial reports and email.	0.5	137.50
Vice Pres (CK)	6/6/2022	Prepare event notice related to draw on debt service reserve fund for posting and post on EMMA Dataport.	0.5	125.00
Sr Assoc (MS)	6/8/2022	Prepare account statements for updating account reconciliation and file.	0.25	50.00
Assoc (JTA)	6/13/2022	Complete account reconciliation for May activity.	0.5	87.50
Sr Assoc (OO)	6/15/2022	Prepare May journal entries.	0.5	100.00
Sr Assoc (OO)	6/24/2022	Email follow up with trustee regarding backup.	0.25	50.00
Sr Assoc (SAM)	6/27/2022	Confirm event notice posted related to nonpayment of debt service.	0.25	50.00
Manager (JLA)	6/28/2022	Assist with identification and provision of material information related to on-going compliance.	0.5	112.50
Sr Assoc (SAM)	6/28/2022	Review excise tax revenue database for January through March. Confirm revenue distributions to Trustee.	1.25	250.00
Sr Assoc (SAM)	6/29/2022	Discuss received funds with associate and follow up.	0.25	50.00
Assoc (JTA)	6/29/2022	Meet with associate to discuss source of funds received by Trustee in May; correspond with Trustee over received funds.	0.5	87.50
Assoc (JTA)	6/30/2022	Review bond documents to determine source of funds; correspond with Trustee for transaction detail.	1	175.00
		Subtotal Fees:		2,125.00

EIN: 03-0461891. Overdue accounts are subject to 1% monthly finance charge.

Total **$2,125.00**

MNS

Billing Inquiries? Call (443) 539-4104

E

2019A-3

2019A-3

[redacted]unty General Services Building

[redacted]Tracking

as of 8.4.2022

SILLING
ARCHITECTS

Financed Total Project Cost *(supplied by Steptoe & Johnson)*	
Building Construction	$15,458,000
Site Demolition Contract	$1,007,000
Project Contingency	$388,507
Balance on A/E Design Contract	$396,900
Past Expenditures that are eligible for reimbursement	$1,458,467
Furniture, Fixtures + Equipment	$850,000
Design Fees (FFE)	$85,000
Estimated Owner Construction Testing	$110,000
Estimated Utility Relocation	$60,000
Total Project Cost	$19,813,874

Current Costs & Remaining Estimates			
Construction Contract Award		$15,458,000	
Site Demolition Contract		$1,007,000	
Demo Change Order 01		$165,540	
Demo Change Order 02		$1,367	
Demo Change Order 03		$21,854	*pending; included in cost*
Change Order 01	*storm piping, conflicts in Modoc, etc.*	$50,800	
Change Order 02	*over-excavotion soils beyond allowance*	$136,975	
Change Order 03	*UTC & underdrain*	$9,876	
Change Order 04	*bottle fillers for day report*	$9,540	
Change Order 05	*extend UTC into existing building*	$26,762	
Change Order 06	*over-excavation soils beyond allowance*	$51,291	
Change Order 07	*Add TV/data outlets, add camera*	$15,865	
Change Order 08	*Add casework, door, cameras*	$27,201	
Change Order 09	*Miscellaneous*	$46,775	
Total Change Order Cost		$563,846	
Balance on A/E Design Contract		$396,900	
Past Expenditures that are eligible for reimbursement		$1,458,467	
Furniture, Fixtures + Equipment			
	Furniture for Building	$390,559	
	Furniture for Day Report	$61,011	
	High Density for County Clerk		
	High Density for Day Report		
Design Fees (FFE)		$85,000	
Owner Construction Testing		$110,000	
Utility Relocation		$52,207	
Total Current Project Cost		$19,582,990	

Owner to verify

Project Cost Over/Under -$230,884

AIA® Document G701™ – 2017

Change Order

PROJECT: *(Name and address)* Harrison County General Services Building	**CONTRACT INFORMATION:** Contract For: General Construction Date: Sept 29,2020	**CHANGE ORDER INFORMATION:** Change Order Number: 09 Date: 7.18.2022
OWNER: *(Name and address)* Harrison County Commission 301 West Main Street Clarksburg, WV 26301	**ARCHITECT:** *(Name and address)* Silling Associates, Inc. 405 Capitol Street, Upper Atrium Charleston, WV 25301	**CONTRACTOR:** *(Name and address)* Rycon Construction 2501 Smallman St Suite 100 Pittsburgh, PA 15222

THE CONTRACT IS CHANGED AS FOLLOWS:
(Insert a detailed description of the change and, if applicable, attach or reference specific exhibits. Also include agreed upon adjustments attributable to executed Construction Change Directives.)

Provide all labor material and equipment to perform the following work.
Rycon Change Request 27 Cut concrete wall to install stone. $4,322.00
Rycon Change Request 29 Cut stone for foundation at entry $1,048.00
Rycon Change Request 36R1 Power and Cat 6 to access control panels. $14,250.00
Rycon Change Request 37 Add AV rack to 2nd floor room 239. $7,140.00
Rycon Change Request 38 Add fall protection in Elev B hoistway. $11,277.00
Rycon Change Request 39 Add power and data to 1st floor entry vestibule for scanner equpment $8,738.00
Total Add $46,775.00

See attached itemizations.

The original Contract Sum was	$	15,458,000.00
The net change by previously authorized Change Orders	$	328,310.00
The Contract Sum prior to this Change Order was	$	15,786,310.00
The Contract Sum will be increased by this Change Order in the amount of	$	46,775.00
The new Contract Sum including this Change Order will be	$	15,833,085.00

The Contract Time will be unchanged by zero (0) days.
The new date of Substantial Completion will be unchanged

NOTE: This Change Order does not include adjustments to the Contract Sum or Guaranteed Maximum Price, or the Contract Time, that have been authorized by Construction Change Directive until the cost and time have been agreed upon by both the Owner and Contractor, in which case a Change Order is executed to supersede the Construction Change Directive.

NOT VALID UNTIL SIGNED BY THE ARCHITECT, CONTRACTOR AND OWNER.

Silling Associates, Inc. **ARCHITECT** *(Firm name)*	Rycon Contruction **CONTRACTOR** *(Firm name)*	Harrison County Commission **OWNER** *(Firm name)*
SIGNATURE	**SIGNATURE**	**SIGNATURE**
Glenn Savage, Construction Admin **PRINTED NAME AND TITLE**	Pat Stone VP operations **PRINTED NAME AND TITLE**	Susan Thomas President Harrison County Commission **PRINTED NAME AND TITLE**
7.18.22 **DATE**	**DATE**	**DATE**

AIA Document G701™ – 2017. Copyright © 1979, 1987, 2000 , 2001 and 2017 by The American Institute of Architects. All rights reserved. The "American Institute of Architects," "AIA," the AIA Logo, and "AIA Contract Documents" are registered trademarks and may not be used without permission. This document was produced by AIA software at 09:34:32 ET on 08/03/2022 under Order No.2114306247 which expires on 04/03/2023, is not for resale, is licensed for one-time use only, and may only be used in accordance with the AIA Contract Documents® Terms of Service. To report copyright violations, e-mail copyright@aia.org.
User Notes: (3B9ADA45)

RYCON Construction Inc.
Employee-Owned. Client-Driven.

2501 Smallman Street, Suite 100
Pittsburgh, PA 15222
412-392-2525
www.ryconinc.com

January 17, 2022

Mr. Glenn Savage
Silling Architects
405 Capitol Street, Upper Atrium
Charleston, WV 25301

RE: Harrison County GSB
Change Order Request # 27
Cut concrete wall to install stone

Dear Mr. Savage

RYCON Construction, Inc is please to submit a proposal in the amount of $ 4,322 to cut the concrete wall adjacent to the front entrance to install stone. Please reference RFI # 77 attached.

An itemized cost breakdown of this RFCO accompanies this letter.

We ask that you give us a written response to this proposal within **five days** of receipt of this correspondence. Please advise how you wish to proceed. Thank you.

Sincerely,

Alan Hopperstead
Senior Project Manager

Attachment: Rycon Proposal

cc: Matt Highlands
Dennis James
Tom Hacke
File

RYCON
Construction Inc.

Rycon Construction, Inc.
2525 Liberty Avenue
Pittsburgh, PA 15222
412-392-2525

PROJECT: Harrison County GSB

Request For Change Order (RFCO): Project Job # 4013 RFCO # 27

QUOTATION: Cut concrete wall at the front entrance to install stone. Reference RFI # 77.

Subcontractor	Notes	Subcontractor Cost
R and B Concrete	Cut concrete wall at the front entrance to install stone. Reference RFI # 77.	$ 3,810
Note	Does not include any cost for cutting the stone by the mason.	
	Subtotals:	$ 3,810

Plus	1.000%	of $ -	
Plus	0.10%	of $ -	
Plus	10.00%	of $ -	
Plus	2.00%	of $ -	

Subcontractor Cost	$ 3,810
P&P Bond	$ 38
Bldg Risk Ins	$ 4
Overhead & Profit	$ 385
B&O Tax	$ 85
TOTAL FOR THIS RFCO	4,322

TIME EXTENSION REQUEST TO CONTRACT: 0 Calendar Days

Rycon Construction Inc. requests your approval to proceed with the above change order to our contract. Please indicate your approval by signing below.

Submitted Date: 17-Jan-22

Accepted: Sillings Architect

By: _____

Date: _____

Rycon Construction, Inc.

By: _____
Alan Hoppenstead

Proposal Valid for 30 Days

RYCON Construction Inc.

2501 Smallman Street, Suite 100
Pittsburgh, PA 15222
T: 412-392-2525 F: 412-392-2526
www. .com

Pittsburgh
Atlanta
Cleveland
Ft. Lauderdale

Request for Information #0077

Subject: To Set Stone

To : Glenn Savage
Silling Architects
405 Capitol Street, Upper Atrium
Charleston, WV 25301
Phone (304) 346-0565
Fax

From: Rycon Construction, Inc.
2501 Smallman Street, Suite 100
Pittsburgh, PA 15222
Phone: (412) 392-2525
Fax: (412) 392-2526

Date : 11/24/2021

Project Name : Harrison County General Services Building

Date Required By: 12/01/2021

Rycon Project #: 4013

Drawing #:

Spec. Section :

Other Reference:

Question:
Please see attached areas where concrete has to be hunched 5 inches for stone to be set to get correct coverage above grade.

Answer:

Mason should remove approximately 1" to 1 1/2" from the back of the cast stone panels in this location. This will reduce the amount of concrete needed removed from the foundation wall. Remove a minimum amount (approx 2 1/2") concrete from the foundation wall taking care not to sever rebar.

G Savage 1.5.22 (Previously discussed)

R and B Concrete Cutting, LLC

59405 Horsemill Road
Shadyside, OH 43947

Invoice

Date	Invoice #
12/22/2021	7452

Rec'd 1/4/22 Renee Barcalow

Bill To
Rycon Construction 2501 Smallman Street Pittsburgh, PA 15222

Terms	Due Date
Net 30	1/21/2022

Description	Amount
Ring saw, 89 feet at 4 inches and 89 feet at 6 inches	3,560.00
Face of building cut to contractor specification, several locations	
2 men trip charge	250.00
Clarksburg, WV	
~~4013-18003~~	
4013-18004	
Total	$3,810.00
Balance Due	$3,810.00

Phone #	E-mail
740-296-0038 office	mbconcretecut@outlook.com

4013
18003

R and B Concrete Cutting, LLC

59405 Horse Mill Road
Shadyside, OH 43947

Concrete Cutting • Core Drilling • Electric Slab Sawing • Wire Sawing

Licensed and Insured

740-296-0199

No. 7452

DATE 12-22-2021

NAME RYCON

ADDRESS Job 29 South 3rd Street Clarksburg W. V.

CASH | C.O.D. | CHARGE ✓ | TERMS 20 DAYS

QTY.	DESCRIPTION	PRICE	AMOUNT
89	14" in R.S. Feet	TOTAL 3560	—
89	16" in R.S. Feet		
	Face of Building Cut to contractor specification several locations		
	Total Trip charge 2 men		250 —
178		TAX	3910 —
AUTHORIZED SIGNATURE		TOTAL	

RYCON
Construction Inc.
Employee-Owned. Client-Driven.

2501 Smallman Street, Suite 100
Pittsburgh, PA 15222
412-392-2525
www.ryconinc.com

January 31, 2022

Mr. Glenn Savage
Silling Architects
405 Capitol Street, Upper Atrium
Charleston, WV 25301

RE: Harrison County GSB
Change Order Request # 29
Cut stone for foundation wall at front entry

Dear Mr. Savage

RYCON Construction, Inc is please to submit a proposal in the amount of $ 1,048 to cut 1" off back of stone to accommodate the concrete foundation wall at the front entry. Please reference RFI # 77.

An itemized cost breakdown of this RFCO accompanies this letter.

We ask that you give us a written response to this proposal within **five days** of receipt of this correspondence. Please advise how you wish to proceed. Thank you.

Sincerely,

Alan Hopperstead
Senior Project Manager

Attachment: Rycon Proposal

cc: Matt Highlands
Dennis James
Tom Hacke
File

RYCON
Construction Inc.

Rycon Construction, Inc.
2525 Liberty Avenue
Pittsburgh, PA 15222
412-392-2525

PROJECT: Harrison County GSB

Request For Change Order (RFCO): Project Job # 4013 RFCO # 29

QUOTATION: Cut 1" off back of stone to accommodate the concrete foundation wall at the front entry.

Subcontractor	Notes	Subcontractor Cost
Harris Masonry	Cut 1" off back of stone to accommodate the concrete foundation wall at the front entry.	$ 924
Note		
	Subtotals:	$ 924

Plus	1.000%	of	$ -
Plus	0.10%	of	$ -
Plus	10.00%	of	$ -
Plus	2.00%	of	$ -

Subcontractor Cost	$ 924
P&P Bond	$ 9
Bldg Risk Ins	$ 1
Overhead & Profit	$ 93
B&O Tax	$ 21
TOTAL FOR THIS RFCO	**1,048**

TIME EXTENSION REQUEST TO CONTRACT: 0 Calendar Days

Rycon Construction Inc. requests your approval to proceed with the above change order to our contract. Please indicate your approval by signing below.

Submitted Date: 31-Jan-22

Accepted: Sillings Architect

By: _____

Date: _____

Rycon Construction, Inc.

By: _____
Alan Hopperstead

Proposal Valid for 30 Days

#29

HARRIS MASONRY INC.

360 Presto-Sygan Road
Bridgeville, PA 15017
Ph : 412-922-7276

Change Request

To: Alan Hopperstead
Rycon Construction, Inc.
2525 Liberty Ave.
Pittsburgh, PA 15222
Ph: 412-392-2525

Number: 2
Date: 1/20/22
Job: 21-06 Harrison Co. General Svcs Bldg
Phone:

Description: Cut concrete and stone at West Entry

We are pleased to offer the following specifications and pricing to make the following changes:

✓ Cut sill ledge between Column C & C.5 in concrete foundation

✓ Cut 1" off back of stone where foundation concrete was not poured to accomodate exterior wall line as follows:
Stone A9 at column C
Stones A14, A15 & D8 at column D.8

Description		Quantity	Unit	Unit Price	Price
Foreman hours		8.00	hr	$75.00	$600.00
Laborer hours		4.00	hr	$50.00	$200.00
				Subtotal:	$800.00
	Overhead		$800.00	10.00%	$80.00
	Profit		$880.00	5.00%	$44.00
				Total:	$924.00

If you have any questions, please contact me at (412)922-7272.

Submitted by: Russ Schoemer
Harris Masonry Inc

Approved by: _____
Date: _____

RYCON
Construction Inc.
Employee-Owned. Client-Driven.

2501 Smallman Street, Suite 100
Pittsburgh, PA 15222
412-392-2525
www.ryconinc.com

June 6, 2022

Mr. Glenn Savage
Silling Architects
405 Capitol Street, Upper Atrium
Charleston, WV 25301

RE: Harrison County GSB
Change Order Request # 36R1
Power and CAT6 to Access Control Panels

Dear Mr. Savage

RYCON Construction, Inc is please to submit a proposal in the amount of $ 14,250 to provide Power and CAT6 cabling to the Access Control Panels not indicated on the drawings. This additional work will not be completed by the June 10, 2022 substantial completion date.

An itemized cost breakdown of this RFCO accompanies this letter.

We ask that you give us a written response to this proposal within **five days** of receipt of this correspondence. Please advise how you wish to proceed. Thank you.

Sincerely,

Alan Hopperstead
Senior Project Manager

Attachment: Rycon Proposal

cc: Matt Highlands
Dennis James
Tom Hacke
File

RYCON
Construction Inc.

Rycon Construction, Inc.
2525 Liberty Avenue
Pittsburgh, PA 15222
412-392-2525

PROJECT: Harrison County GSB

Request For Change Order (RFCO): Project Job # 4013 RFCO # 36R1

QUOTATION: Provide Power and CAT6 cabling to the Access Control Panels not indicated on the drawings.

Subcontractor	Notes	Subcontractor Cost
Tri County	Provide Power and CAT6 cabling to the Access Control Panels not indicated on the drawings.	$ 12,562
		$ -
Note	No patching of finishes are included. If finished get damaged by completing this work it will be completed on a T&M basis.	
	This additional work will not be completed by June 10, 2022 substantial completion date. Rycon reserves its right to request an extention of time of days to complete this work after June 10, 2022.	
	Subtotals:	$ 12,562

Plus	1.000%	of $ -	
Plus	0.10%	of $ -	
Plus	10.00%	of $ -	
Plus	2.00%	of $ -	

Subcontractor Cost	$ 12,562
P&P Bond	$ 126
Bldg Risk Ins	$ 13
Overhead & Profit	$ 1,270
B&O Tax	$ 279
TOTAL FOR THIS RFCO	14,250

TIME EXTENSION REQUEST TO CONTRACT: TBD Calendar Days

Rycon Construction inc. requests your approval to proceed with the above change order to our contract. Please indicate your approval by signing below.

Submitted Date: 19-Apr-22

Accepted: Sillings Architect

By: _____

Date: _____

Rycon Construction, Inc.

By: _____
Alan Hopperstead

Proposal Valid for 30 Days

TRI-COUNTY ELECTRIC

3-Jun-22

HARRISON COUNTY GSB
FILE:FTCE\77807651\RFP19R.XLS

DESCRIPTION	QTY	MAT. UNIT	MAT. TOTAL	LABOR UNIT	LABOR TOTAL
POWER & DATA FOR SECURITY PANELS - 11 PANELS TOTAL					
4" SQ BOX	8	$ 1.68	$ 13.44	0.300	2.40
BLANK COVER	8	$ 0.54	$ 4.32	0.060	0.48
3/4" EMT CONDUIT	360	$ 1.14	$ 410.40	0.060	21.60
3/4" EMT CONN	16	$ 0.40	$ 6.40	0.090	1.44
3/4" EMT CPLG	36	$ 0.42	$ 15.12	0.060	2.16
3/4" EMT STRUT STRAP	7.2	$ 1.21	$ 8.71	0.080	0.58
2' SR. STRUT	18	$ 3.15	$ 56.70	0.250	4.50
BEAM CLAMPS/HARDWARE	36	$ 2.95	$ 106.20	0.280	10.08
#12 THHN WIRE	1080	$ 0.19	$ 205.28	0.006	6.48
SPARE 1P-20A BREAKER TERM	4	$ -	$ -	0.500	2.00
DATA PURCHASE/INSTALL/COORD	1	$ 3,300.00	$ 3,300.00	2.000	2.00
CAT6A	11	$ -	$ -	0.000	0.00
RJ45 CAT6A TERM	22	$ -	$ -	0.000	0.00
TESTING	11	$ -	$ -	0.000	0.00
4" SQ BOX	4	$ 1.68	$ 6.72	0.300	1.20
BLANK COVER	4	$ 0.54	$ 2.16	0.060	0.24
3/4" EMT CONDUIT	110	$ 1.14	$ 125.40	0.060	6.60
3/4" EMT CONN	11	$ 0.40	$ 4.40	0.090	0.99
3/4" EMT STRUT STRAP	22	$ 1.21	$ 26.62	0.080	1.76
3/4" PLASTIC BUSHING	11	$ 0.09	$ 0.99	0.190	2.09
2' SR. STRUT	22	$ 3.15	$ 69.30	0.250	5.50
BEAM CLAMPS/HARDWARE	44	$ 2.95	$ 129.80	0.280	12.32
SUPERVISION	1	$ -	$ -	10.000	10.00

MATERIAL TOTAL		$	4,491.96
6% SALES TAX		$	289.52
LABOR (HRS)	94.42		
LABOR @ 63 PER HR		$	5,948.21
2% B&O TAX		$	214.19
15% OV/PROFIT		$	1,638.58
GRAND TOTAL		$	12,562.46

RYCON
Construction Inc.
Employee-Owned. Client-Driven.

2501 Smallman Street, Suite 100
Pittsburgh, PA 15222
412-392-2525
www.ryconinc.com

April 20, 2022

Mr. Glenn Savage
Silling Architects
405 Capitol Street, Upper Atrium
Charleston, WV 25301

RE: Harrison County GSB
Change Order Request # 37
Add AV Rack to second floor

Dear Mr. Savage

RYCON Construction, Inc is please to submit a proposal in the amount of $ 7,140 to add an AV Rack to the second floor in room # 238 for equipment in room # 239. Please provide approval on or before May 3, 2022 to avoid additional costs and time to complete the work for project completion.

An itemized cost breakdown of this RFCO accompanies this letter.

We ask that you give us a written response to this proposal within five days of receipt of this correspondence. Please advise how you wish to proceed. Thank you.

Sincerely,

Alan Hopperstead
Senior Project Manager

Attachment: Rycon Proposal

cc: Matt Highlands
Dennis James
Tom Hacke
File

RYCON
Construction Inc.

Rycon Construction, Inc.
2525 Liberty Avenue
Pittsburgh, PA 15222
412-392-2525

PROJECT: Harrison County GSB

Request For Change Order (RFCO): Project Job # 4013 RFCO # 37

QUOTATION: ADD an AV Rack to the second floor in room 238 for equipment in room 239. None indicated on the drawings to be supplied.

Subcontractor	Notes	Subcontractor Cost
Tri County	ADD an AV Rack to the second floor in room 238 for equipment in room 239.	$ 6,294
Note	Please provide approval on or before May 3, 2022 to avoid additional costs and time to complete the work for project completion.	
	Subtotals:	$ 6,294

Plus	1.000%	of $	-
Plus	0.10%	of $	-
Plus	10.00%	of $	-
Plus	2.00%	of $	-

Subcontractor Cost	$	6,294
P&P Bond	$	63
Bldg Risk Ins	$	6
Overhead & Profit	$	636
B&O Tax	$	140
TOTAL FOR THIS RFCO		7,140

TIME EXTENSION REQUEST TO CONTRACT: 0 Calendar Days

Rycon Construction Inc. requests your approval to proceed with the above change order to our contract. Please indicate your approval by signing below.

Submitted Date: 20-Apr-22

Accepted: Sillings Architect

By: _____

Date: _____

Rycon Construction, Inc.

By: _____
Alan Hoppenstead

Proposal Valid for 30 Days

TRI-COUNTY ELECTRIC

19-Apr-22

HARRISON COUNTY GSB
FILE:FTCE\77807651\RFP20.XLS

DESCRIPTION	QTY	MAT. UNIT	MAT. TOTAL	LABOR UNIT	LABOR TOTAL
POWER & DATA FOR AV RACKS 238 & 326					
4" SQ BOX	2	$ 1.68	$ 3.36	0.300	0.60
BLANK COVER	2	$ 0.54	$ 1.08	0.060	0.12
TILE RING	2	$ 1.50	$ 3.00	0.060	0.12
3/4" EMT CONDUIT	180	$ 1.14	$ 205.20	0.060	10.80
3/4" EMT CONN	16	$ 0.40	$ 6.40	0.090	1.44
3/4" EMT CPLG	36	$ 0.42	$ 15.12	0.060	2.16
3/4" EMT STRUT STRAP	7.2	$ 1.21	$ 8.71	0.080	0.58
2' SR. STRUT	9	$ 3.15	$ 28.35	0.250	2.25
BEAM CLAMPS/HARDWARE	18	$ 2.95	$ 53.10	0.280	5.04
#12 THHN WIRE	540	$ 0.19	$ 102.64	0.006	3.24
DUPLEX RECEPTACLE	4	$ 3.50	$ 14.00	0.350	1.40
DOUBLE DUPLEX COVER	2	$ 1.27	$ 2.54	0.060	0.12
SPARE 1P-20A BREAKER TERM	2	$ -	$	0.500	1.00
✓ DATA PURCHASE/INSTALL/COORD	1	$ 1,400.00	$ 1,400.00	2.000	2.00
CAT6A	2	$ -	$ -	0.000	0.00
RJ45 CAT6A TERM	4	$ -	$ -	0.000	0.00
TESTING	4	$ -	$ -	0.000	0.00
4" SQ BOX	2	$ 1.68	$ 3.36	0.300	0.60
BLANK COVER	2	$ 0.54	$ 1.08	0.060	0.12
TILE RING	2	$ 1.50	$ 3.00	0.060	0.12
3/4" EMT CONDUIT	20	$ 1.14	$ 22.80	0.060	1.20
3/4" EMT CONN	2	$ 0.40	$ 0.80	0.090	0.18
3/4" EMT CPLG	2	$ 0.42	$ 0.84	0.060	0.12
3/4" EMT STRUT STRAP	4	$ 1.21	$ 4.84	0.080	0.32
3/4" PLASTIC BUSHING	2	$ 0.09	$ 0.18	0.190	0.38
2' SR. STRUT	1	$ 3.15	$ 3.15	0.250	0.25
BEAM CLAMPS/HARDWARE	2	$ 2.95	$ 5.90	0.280	0.56
MIDDLE ATLANTIC RK16 FL RACK	1	$ -	$ -	0.000	0.00
WELTRON SURGE PROTECTOR	1	$ -	$ -	0.000	0.00
MIDDLE ATLANTIC EB2 FLG BLANK	4	$ -	$ -	0.000	0.00
AV RACK LOT	1	$ 515.00	$ 515.00	0.000	0.00
SUPERVISION	1	$ -	$ -	10.000	10.00

MATERIAL TOTAL		$ 2,404.45
6% SALES TAX		$ 144.27
LABOR (HRS)	44.72	
LABOR @ 63 PER HR		$ 2,817.11
2% B&O TAX		$ 107.32
15% OV/PROFIT		$ 820.97
GRAND TOTAL		$ 6,294.11

AV RACK LOCATED IN RM 238 FOR EQUIPMENT TO FUNCTION IN RM 239. NOT SHOWN ON DWGS TO BE SUPPLIED.

JRM TEC, INC.

304-216-1111
rmiller@jrmtec.com
PO BOX 211
Mount Morris PA 15349

Apr 19, 2022

Harrison County General Services Building Project

This proposal provides all labor, material and supervision as required for the installation of 2 additional Cat6A cables to AV Racks..

- 1 Cat6A cable will be installed from the nearest communications closet to Room 238. The network cable will be terminated on an existing Cat6A patch panel on the same floor communications closet.
- 1 Cat6A cable will be installed from the nearest communications closet to Room 228. The network cable will be terminated on an existing Cat6A patch panel on the same floor communications closet.
- The cable will be tested and labeled to match the embedded base.
- Racks are not included.
- Conduits are not included.

✓ Project cost = $1,400.00

Ryan Miller – BICSI RCDD
Vice President/Owner
304-216-1111

---------- Date: 4/19/22

RYCON
Construction Inc.
Employee-Owned. Client-Driven.

2501 Smallman Street, Suite 100
Pittsburgh, PA 15222
412-392-2525
www.ryconinc.com

May 24, 2022

Mr. Glenn Savage
Silling Architects
405 Capitol Street, Upper Atrium
Charleston, WV 25301

RE: *Harrison County GSB*
Change Order Request # 38
Add fall protection wall in Elevator B hoistway

Dear Mr. Savage

RYCON Construction, Inc is please to submit a proposal in the amount of $ 11,277 to add a fall protection wall in Elevator B hoistway to prevent 12" fall hazard due to no handrails. Handrails could not be installed due to low over head.

An itemized cost breakdown of this RFCO accompanies this letter.

We ask that you give us a written response to this proposal within **five days** of receipt of this correspondence. Please advise how you wish to proceed. Thank you.

Sincerely,

Alan Hopperstead
Senior Project Manager

Attachment: Rycon Proposal

cc: Matt Highlands
Dennis James
Tom Hacke
File

RYCON
Construction Inc.

Rycon Construction, Inc.
2525 Liberty Avenue
Pittsburgh, PA 15222
412-392-2525

PROJECT: Harrison County GSB

Request For Change Order (RFCO): Project Job # 4013 RFCO # 38

QUOTATION: Add a fall protection wall in Elevator 8 hoistway to prevent 12" fall hazard due to no handrails. Handrails could not be installed due to low over head.

Subcontractor	Notes	Subcontractor Cost
E&R	Build a fall protection wall in elevator 8 hoistway. T&M.	$ 3,656
Schindler	Operate car for carpenters to build fall protection wall	$ 6,285
Note	Fall protection wall is required per code.	
	Subtotals:	$ 9,941

Plus	1.000%	of $ -	
Plus	0.10%	of $ -	
Plus	10.00%	of $ -	
Plus	2.00%	of $ -	

Subcontractor Cost	$ 9,941
P&P Bond	$ 99
Bldg Risk Ins	$ 10
Overhead & Profit	$ 1,005
B&O Tax	$ 221
TOTAL FOR THIS RFCO	11,277

TIME EXTENSION REQUEST TO CONTRACT: 0 Calendar Days

Rycon Construction Inc. requests your approval to proceed with the above change order to our contract. Please indicate your approval by signing below.

Submitted Date: 24-May-22

Accepted: Sillings Architect

By: _____

Date: _____

Rycon Construction, Inc.

By: _____
Alan Hoppenstead

Proposal Valid for 30 Days

EASLEY&RIVERS

Rycon Construction Inc.
2501 Smallman Street, Suite 100
Pittsburgh, PA 15222

Re: Rycon Project #4013
E&R Project #791502

INVOICE #791502513

DATE *5/6/22*

Easley & Rivers Tickets EWO #34411 - 34413 for building a wall in elevator shaft B.

16 hrs. - Carpenter Foreman @ 66.78	1068.48		
16 hrs. - Carpenter @ 63.61	1,017.76		
			2,086.24
13 Sheets - Fire Sheild Drywall @ 23.76	308.88		
56 pcs. - 6" x 10' x 1 5/8 Stud @ 8.62	482.72		
16 pcs. - 6" x 10' x 1 1/4 Track @ 10.70	171.20		
	962.80		
WV Sales Tax 7%	67.40		1,030.20
			3,116.44
15% Overhead & Profit		467.47	3,583.90
2% B & O Tax		71.68	3,655.58
TOTAL DUE THIS INVOICE.			3,655.58

173 Mathieson Street, Morgantown, WV 26501
Phone: (304)291-6803 - Fax: (304)291-6879
www.EasleyAndRivers.com

34400 - 34449

PITTS

34411 EASLEY & RIVERS, INC.

3800 Morgantown Industrial Park
Morgantown, West Virginia 26501-2348
Telephone: (301) 291-6803

207 Townsend Drive
Monroeville, Pennsylvania 15146
Telephone: (412) 795-4482

EXTRA WORK ORDER

DATE 4/30/2022

You Are Authorized To Proceed With Build 6" wall drywall one side in elevator shaft B on East side to deck

FOR Rycon

PROJECT Harison County General Service Building

JOB NO. 741502

TIME	MATERIALS
____ Hrs. Supt.	Delivery of:
____ Hrs. Carp. Foreman	6" x 10' x 5/8 stud 56 PC.
____ Hrs. Carpenter	6" x 10' x 1/2 Track 16 PC
____ Hrs. Taper Foreman	5/8 x 4' x 8' Fireshield Drywall 13 PC.
____ Hrs. Taper	
____ Hrs. Lather Foreman	
____ Hrs. Lather	
____ Hrs. Plasterer Foreman	
____ Hrs. Plasterer	
____ Hrs. Nozzle Foreman	
____ Hrs. Nozzle Man	
____ Hrs. Laborer Foreman	
____ Hrs. Laborer	
____ Hrs. Hod Carrier	
____ Hrs. Truck & Driver	

Authorized By

Mail To

34412 EASLEY & RIVERS, INC.

3600 Morgantown Industrial Park
Morgantown, West Virginia 26501-2348
Telephone: (301) 291-6803

207 Townsend Drive
Monroeville, Pennsylvania 15146
Telephone: (412) 795-4182

EXTRA WORK ORDER

DATE 5/02/2022

You Are Authorized To Proceed With FRAME 4 6" WALL WITH 1 LAYER OF DRYWALL ON EAST SIDE OF ELEVATOR CAR B FROM Ground to Roof.

FOR RYCON

PROJECT Harrison County General Service Building

JOB NO. 791502

TIME	MATERIALS
____ Hrs. Supt.	
8 Hrs. Carp. Foreman	2 MEN 8 HOURS EACH
8 Hrs. Carpenter	
____ Hrs. Taper Foreman	
____ Hrs. Taper	
____ Hrs. Lather Foreman	
____ Hrs. Lather	
____ Hrs. Plasterer Foreman	
____ Hrs. Plasterer	
____ Hrs. Nozzle Foreman	
____ Hrs. Nozzle Man	
____ Hrs. Laborer Foreman	
____ Hrs. Laborer	
____ Hrs. Hod Carrier	
____ Hrs. Truck & Driver	

Authorized By [signature]

Mail To

34413 EASLEY & RIVERS, INC.

3800 Morgantown Industrial Park
Morgantown, West Virginia 26501-2348
Telephone: (301) 291-6803

207 Townsend Drive
Monroeville, Pennsylvania 15146
Telephone: (412) 795-4482

EXTRA WORK ORDER

DATE 5/03/2022

You Are Authorized To Proceed With FRAME & 6" WALL DRYWALL one side IN ELEVATOR SHAFT B FROM BASE TO DECK

FOR RYCON

PROJECT Harrison County General Service Building

JOB NO. 791502

TIME	MATERIALS
____ Hrs. Supt.	
8 Hrs. Carp. Foreman	2 MEN
8 Hrs. Carpenter	
____ Hrs. Taper Foreman	
____ Hrs. Taper	
____ Hrs. Labor Foreman	
____ Hrs. Lather	
____ Hrs. Plasterer Foreman	
____ Hrs. Plasterer	
____ Hrs. Nozzle Foreman	
____ Hrs. Nozzle Man	
____ Hrs. Laborer Foreman	
____ Hrs. Laborer	
____ Hrs. Hod Carrier	
____ Hrs. Truck & Dozer	

Authorized By _____

Mail To _____

May 9, 2022

Schindler

Allan Hopperstead
Rycon

Project: Harrion County N7945 Elevator 2 (B)

Please sign the change below (or issue your own change order) for additional charges operate car for carpenters to build fall protection wall in hoistway.

2 days of hoist way construction to install wall to prevent 12" fall hazard due to no handrails. Handrails could not be installed due to low over head.

	Mechanic In Charge		0 straight hours	$0.00	/ hour	$0.00
			0 overtime hours	$0.00	/ hour	$0.00
	Operator		0 straight hours	$0.00	/ hour	$0.00
			0 overtime hours	$0.00	/ hour	$0.00
	Helper		0 straight hours	$0.00	/ hour	$0.00
			0 overtime hours	$0.00	/ hour	$0.00
	Team		16 straight hours	$350.00	/ hour	$5,600.00
			0 overtime hours	$0.00	/ hour	$0.00
Supervisor			0 straight hours	$0.00	/ hour	$0.00
Engineering:			0	$0.00	/ hour	$0.00
Union Expenses:		Zone 1	4 number of days @	$96.40	per day	$385.60
		Zone 2		$0.00		
		Zone 3		$0.00		
Mileage:			0 miles @	$0.00		$0.00
Permits:						$0.00
Overhead:	5%					
Profit:	5%					$299.28
					TOTAL $	6,284.88

Please sign and return one copy of this letter indicating your agreement with the amount quoted and authortzing us to proceed. Please email to david.west@schindler.com. Thank you.

SCHINDLER ELEVATOR CORP.

by:
date:

Craig Cuccaro/General Manager
Schindler Elevator
230 Bilmar Drive

Field Change Request Form

Schindler

All lines MUST be completed; please include signature and printed name of approving party

1. (G.O.) Number N7945 Job Name Harrison County Date: 5-9-22
2. Customer Order # for this Work _____
3. General Contractor Ryan
4. Work Scope (Reason for field change):
   - ☐ Remobilization due to _____
   - ☑ Operator time at GC's request. Explain reason: To Have Carpenters Build wall in hoistway.
   - ☐ Inadequate site conditions (generator, temporary pump, add support, etc.)
     Explain: _____
   - ☐ Expedite installation
   - ☐ Scope change (install pit ladder, signage, pre-inspections, add security, etc.)
     Explain: _____
   - ☐ Temporary Use (Inspection, monthly fees, callbacks)
   - ☐ Reinspection due to failure by others (Attach copy of inspection report)
   - ☐ Stolen or damaged material. Describe: _____
5. Hourly Billing Rate $_____ Std / OT Hrs 16 (Team) Man _____
6. Total hours: _____ Permits $ _____ Expenses $ _____
7. Total Price Add $ _____

GC Approval (Print) Dennis James Title: Superintendent

GC Approval Signature Dennis James Date 5-9-22

Schindler Rep: (Print) _____

Schindler Rep: (Signature) _____ Date: _____

By signing above, the customer's representative is confirming he/she has the authority to approve the additional cost associated with this extra work.

Folder Copy

Keg 70000 (Rev. 01/09)

White – GC Copy

RYCON
Construction Inc.
Employee-Owned. Client-Driven.

2501 Smallman Street, Suite 100
Pittsburgh, PA 15222
412-392-2525
www.ryconinc.com

June 8, 2022

Mr. Glenn Savage
Silling Architects
405 Capitol Street, Upper Atrium
Charleston, WV 25301

RE: Harrison County GSB
Change Order Request # 39
Add power and data to the first floor entry cubicle

Dear Mr. Savage

RYCON Construction, Inc is please to submit a proposal in the amount of $ 8,738 to add power and data to the first floor lobby entry cubicle.

An itemized cost breakdown of this RFCO accompanies this letter.

We ask that you give us a written response to this proposal within **five days** of receipt of this correspondence. Please advise how you wish to proceed. Thank you.

Sincerely,

Alan Hopperstead
Senior Project Manager

Attachment: Rycon Proposal

cc: Matt Highlands
Dennis James
Tom Hacke
File

RYCON
Construction Inc.

Rycon Construction, Inc.
2525 Liberty Avenue
Pittsburgh, PA 15222
412-392-2525

PROJECT: Harrison County GSB

Request For Change Order (RFCO): Project Job # 4013 RFCO # 39

QUOTATION: Add power and data to the first floor entry cubicle.

Subcontractor	Notes	Subcontractor Cost
Tri County	Add power and data to the first floor entry cubicle.	$ 6,753
E&R	Carpenter time to repair/rework ceilings from elelctrical/data work	$ 950
Note	Does not include repair to the wall tile or floor tile. Repairs will be completed on a T&M basis.	
	Subtotals:	$ 7,703

Plus	1.000%	of $	-
Plus	0.10%	of $	-
Plus	10.00%	of $	-
Plus	2.00%	of $	-

Subcontractor Cost	$	7,703
P&P Bond	$	77
Bldg Risk Ins	$	8
Overhead & Profit	$	779
B&O Tax	$	171
TOTAL FOR THIS RFCO		8,738

TIME EXTENSION REQUEST TO CONTRACT: TBD Calendar Days

Rycon Construction Inc. requests your approval to proceed with the above change order to our contract. Please indicate your approval by signing below.

Submitted Date: 24-May-22

Accepted: Sillings Architect

By: _____

Date: _____

Rycon Construction, Inc.

By: _____
Alan Hoppenstead

Proposal Valid for 30 Days

#31

TRI-COUNTY ELECTRIC

7-Jun-22

HARRISON COUNTY GSB
FILE:FTCE\77807651\RFP20.XLS

DESCRIPTION	QTY	MAT. UNIT	MAT. TOTAL	LABOR UNIT	LABOR TOTAL
POWER & DATA FOR 1ST FLOOR ENTRY CUBICAL					
4" SQ BOX	2	$ 1.68	$ 3.36	0.350	0.70
BLANK COVER	1	$ 0.54	$ 0.54	0.060	0.06
TILE RING	1	$ 1.50	$ 1.50	0.060	0.06
3/4" EMT CONDUIT	140	$ 1.14	$ 159.60	0.060	8.40
3/4" EMT CONN	6	$ 0.40	$ 2.40	0.090	0.54
3/4" EMT CPLG	14	$ 0.42	$ 5.88	0.060	0.84
3/4" EMT STRUT STRAP	21	$ 1.21	$ 25.41	0.080	1.68
2' SR. STRUT	14	$ 3.15	$ 44.10	0.250	3.50
BEAM CLAMPS/HARDWARE	28	$ 2.95	$ 82.60	0.280	7.84
#12 THHN WIRE	420	$ 0.19	$ 79.83	0.006	2.52
12/2C MC CABLE	15	$ -	$ -	0.100	1.50
MC CONN	2	$ 0.23	$ 0.46	0.130	0.26
DUPLEX RECEPTACLE	2	$ 3.50	$ 7.00	0.350	0.70
DOUBLE DUPLEX COVER	1	$ 1.27	$ 1.27	0.060	0.06
SPARE 1P-20A BREAKER TERM	1	$ -	$ -	0.500	0.50
FINISHED CEILING SPACE WORK	1	$ -	$ -	4.000	4.00
DRILLING CABINETRY & TILE WALL	1	$ 25.00	$ 25.00	2.000	2.00
FISHING WALL & CABINETRY	1	$ -	$ -	2.750	2.75
DATA PURCHASE/INSTALL/COORD	1	$ 2,000.00	$ 2,000.00	2.000	2.00
CAT6A	4	$ -	$ -	0.000	0.00
RJ45 CAT6A TERM	8	$ -	$ -	0.000	0.00
TESTING	4	$ -	$ -	0.000	0.00
4" SQ BOX	2	$ 1.68	$ 3.36	0.300	0.60
BLANK COVER	2	$ 0.54	$ 1.08	0.060	0.12
TILE RING	2	$ 1.50	$ 3.00	0.060	0.12
1" STEEL FLEX	10	$ -	$ -	0.060	0.60
1" FLEX CONN	2	$ -	$ -	0.230	0.46
3/4" EMT CONDUIT	20	$ 1.14	$ 22.80	0.060	1.20
3/4" EMT CONN	2	$ 0.40	$ 0.80	0.090	0.18
3/4" EMT CPLG	2	$ 0.42	$ 0.84	0.060	0.12
3/4" EMT STRUT STRAP	4	$ 1.21	$ 4.84	0.080	0.32
3/4" PLASTIC BUSHING	2	$ 0.09	$ 0.18	0.190	0.38
2' SR. STRUT	1	$ 3.15	$ 3.15	0.250	0.25
BEAM CLAMPS/HARDWARE	2	$ 2.95	$ 5.90	0.280	0.56
FISHING WALL & CABINETRY	1	$ -	$ -	2.750	2.75
SUPERVISION	1	$ -	$ -	2.000	2.00

* Power installed in Conduit to Electric Closet 112.

MATERIAL TOTAL		$ 2,484.90
6% SALES TAX		$ 149.09
LABOR (HRS)	49.57	
LABOR @ 63 PER HR		$ 3,122.91
2% B&O TAX		$ 115.14
15% OV/PROFIT		$ 880.81
GRAND TOTAL		$ 6,752.85

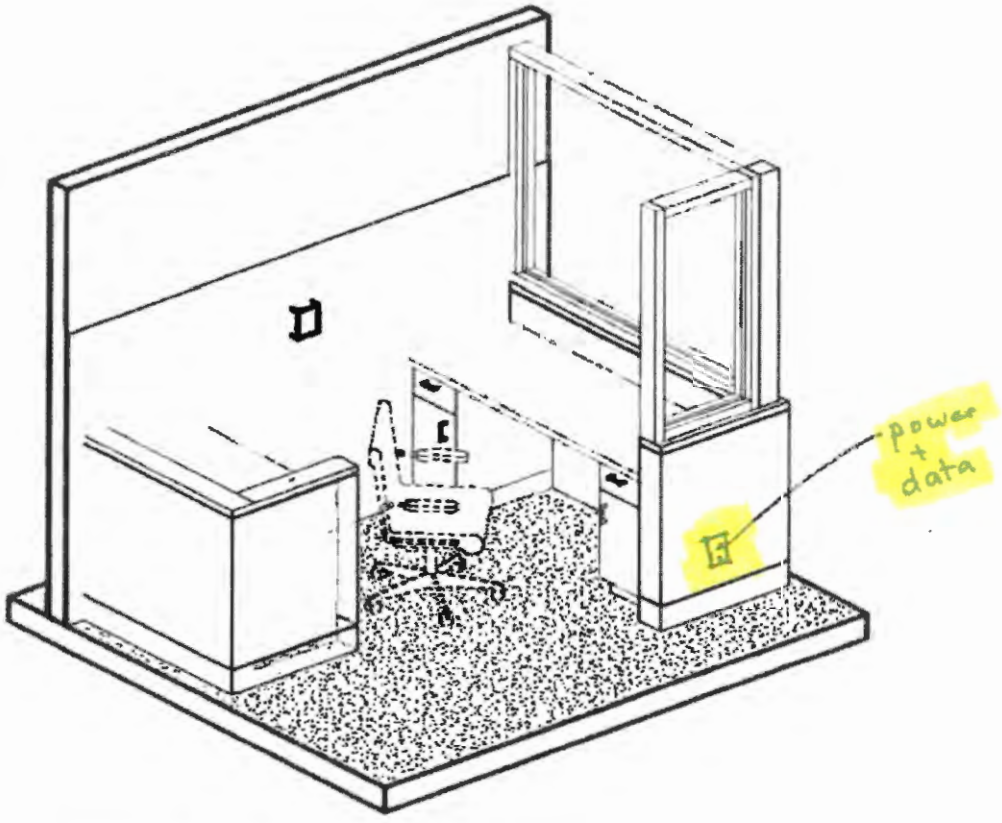

7
A1.9

LOBBY 101 - AXON

10-A

HARRISON COUNTY BUILDING COMMISSION
LEASE REVENUE BONDS
SERIES 2020
(GENERAL SERVICES ADMINISTRATION BUILDING PROJECT)

REQUISTION FORM

WesBanco Bank Incorporated
Attn: Corporate Trust Department
One Bank Plaza
Wheeling, West Virginia 26003

Ms. LaShawnda K. Fogle

You are authorized to make the following disbursement from the Acquisition Fund maintained under that certain Bond Indenture and Security Agreement dated as of October 1, 2020, by and between the Harrison County Building Commission and WesBanco Bank, Incorporated as Trustee:

1) Requisition Number: #74
2) Rycon Construction Inc.
   2501 Smallman Street, Suite 100
   Pittsburg, PA 15222

3) Amount: $46,775.00

A. The expense listed above has been incurred as a Cost of the Project, is properly chargeable against the Acquisition Fund, is due and unpaid, and has not been the basis of any previous disbursement.

B. The total obligation on account of which the payment requested herein is to be made is a total of $46,775.00 of which $ 0.00 has previously been paid, and $46,775.00 remains outstanding with above amount now due and payable.

C. If applicable, a copy of the invoice relating to this payment is attached, and a description of the work, materials or equipment is attached. There are no vendors', mechanics' or other liens, bailment leases or conditional sales contracts which should be satisfied or discharged before the payments as requisitioned therein are made, or which will not be discharged before the payments as requisitioned therein are made, or which will not be discharged by such payment.

D. That the work, material or other purchased item to which the payment relates has been accomplished, delivered or installed in a manner satisfactory to the County.

E. Funds remaining in the Acquisition Fund are sufficient to complete acquisition, construction, equipping and improvement of the Project.

F. The Trustee shall have no duty to make any investigation of this Requisition, invoices and/or statements attached hereto, but may accept the same as conclusive evidence of the

accuracy of this Requisition. Trustee may rely in good faith on this Requisition signed by an Authorized Lessee Representative and that said document is believed to be genuine.

Dated this the ____ day of _____, 20 ____.

THE COUNTY COMMISSION OF HARRISON COUNTY, WEST VIRGINIA

By: _____

Its: _____

Schedule I for Requisition #74

REIMBURSEMENT AND THIRD PARTY PAYMENTS

(1) Reimbursement to Issuer or Harrison County Commission:

	Vendor	Description of Expense	Payment Date	Amount
a.				
b.				
c.				
d.				
e.				
f.				
Total				$ -

(2) Payments to Third Party Payees or Other Vendors:

	Vendor	Description of Expense	Approval Date	Amount
a.	Rycon Construction	Site Work	31-Aug-22	$46,755.00
b.				
c.				
d.				
e.				
f.				
Total				$ 46,755.00

(3) Total amount of disbursements pursuant to this Requisition: $ 46,755.00

The items listed for reimbursement listed above in Section 1 & Section 2 are supported by attached copies of invoices or statements.

Approval Signature

Date

Harrison County Commission

Request to Attend Meeting

11

Name: Jim Copenhaver

Department: 911

Destination: Flatwoods WV

Travel Dates:

Reason: September 21 and September 22 2022 - No Overnight Stay - WV E911 Council Next-Gen E911 Committee Meetings

Total Estimated Cost $ 0.00

Transportation			$ _____
Air		$ _____	
Private Vehicle:			
Mileage _____	X .56	$ _____	
Rental Car		$ _____	
Lodging			$ _____
Registration			$ _____
Meals (Estimated)			$ _____
Incidentals			$ _____

Employee Signature: Jim Copenhaver Date: 8/23/2022

Approving Authority: _____ Date: _____
(County Commission or Constitutional Official)

County Commission Action ( ) Approve ( ) Disapprove
Authorized travel within the approved budget by and for other constitutional offices does not require County Commission approval

Date: _____

A8 Form Revised: May 1, 2014

12

Harrison County Commission

Request to Attend Meeting

Name: Doug Comer

Department: Parks n Rec

Destination: WV RPA Conference

Travel Dates: Oct. 11-13

Reason: Annual Conference

Total Estimated Cost $ _____

Transportation $ _____

Air $ _____

Private Vehicle:

Mileage 300 .625 $ 187.50

Rental Car $ _____

Lodging $ 250-

Registration $ 265-

Meals (Estimated) $ _____

Incidentals $ _____

Employee Signature: _____ Date: 8.24-22

Approving Authority: _____ Date: _____
(County Commission or Constitutional Official)

County Commission Action ( ) Approve ( ) Disapprove
Authorized travel within the approved budget by and for other constitutional offices does not require County Commission approval

Date: _____

A8 Form Revised: May 1, 2014

49TH WEST VIRGINIA RECREATION & PARKS ASSOCIATION

Annual Conference • October 11th-13th

The Resort at Glade Springs • Daniels, WV

Conference Registration

Name (one per form): Doug Comer Title: Dep. Director

Agency/Organization: Harrison Co Parks n Rec Phone: 304 669-9907

Address: 43 Recreation Dr. Clarksburg WV 26301 Email: dcomer@harrisoncountywv.com

Conference Package Options

1) Professional Three-Day Package
Check activities you'll attend
$175

- ☐ Tuesday Evening Social
- ☐ Wed. Exhibitor Luncheon
- ☐ Wed. Exhibitor Dinner
- ☐ Wed. Evening Fundraiser/Social
- ☐ Thursday Awards Luncheon

2) Student Three-Day Package
Check activities you'll attend
$50

- ☐ Tuesday Evening Social
- ☐ Wed. Exhibitor Luncheon
- ☐ Wed. Exhibitor Dinner
- ☐ Wed. Evening Fundraiser/Social
- ☐ Thursday Awards Luncheon

3) Individual/Daily Packages
Choose your day and activities
Tues./Wed. = $75 Thursday = $50

- ☐ Tuesday Evening Social
- ☐ Wed. Exhibitor Luncheon
- ☐ Wed. Exhibitor Dinner
- ☐ Wed. Evening Fundraiser/Social
- ☐ Thursday Awards Luncheon

Membership

☐ Student	$10
☐ Professional	$35
☐ Board/Commission	$50
☐ Agency	$250

Board/Comm./Agency
Include member list with membership

Memberships
Expire November 1st

A La Carte

☐ Golf Outing	$55
☐ Extra Exhibitor Lunch	$25
☐ Extra Exhibitor Dinner	$30
☐ Extra Awards Lunch	$30

Cancellation Policy
Registration fee less $20 is refundable

2022 Conference & Dues

Total your selections

Conference Package	$ 175
Annual Membership	$ 35
A La Carte Extras	$ 55
TOTAL	$ 265

→ make checks payable to WVRPA

LODGING

The Resort at Glade Springs
WVRPA rate available until 8/26/22
$109/room/night

Mail form and payment to: *WVRPA, c/o City Parks of Clarksburg, 1 Clarksburg Park Way, Nutter Fort, WV 26301*

United States of America

State of West Virginia

County of Harrison, ss:

A-1

Clerk's Fiduciary Report

Estate from Wednesday, August 10, 2022, through Tuesday, August 16, 2022

The County Commission of Harrison County this day proceeded to examine the report of the Clerk of the Commission of the Fiduciary and Probate matters had before his during the vacation of the Commission, and it appearing to the Commission that all of the proceedings had therefore ordered that the said report and matters thereto contained be and the same is hereby ratified and confirmed. Said report is in words and figures as follows, to -wit:

On, Thursday, August 11, 2022, the following matters were disposed of in the presence of the Clerk:

A duly certified copy of the last will and testament of **RICHARD D KNOTTS**, deceased, late a resident of TAYLOR, WEST VIRGINIA, was admitted to record.

On, Friday, August 12, 2022, the following matters were disposed of in the presence of the Clerk:

The last will and testament of **BARBARA JEAN STALNAKER**, deceased, was proved by the affidavit of the attesting witnesses and the same was admitted to probate and record.

KEVIN L STALNAKER, who was named in the last will and testament of **BARBARA JEAN STALNAKER**, deceased, as CO EXECUTOR thereof, qualified as such. No bond was required.
RICHARD F STALNAKER, who was named in the last will and testament of **BARBARA JEAN STALNAKER**, deceased, as CO EXECUTOR thereof, qualified as such. No bond was required.

A duly exemplified copy of the last will and testament of **DOROTHY J SOSINSKY**, deceased, late a resident of FAYETTE, PENNSYLVANIA, was admitted to record.

On, Monday, August 15, 2022, the following matters were disposed of in the presence of the Clerk:

More than 31 days since the date of death or the surviving spouse or heir, upon a motion, **TAUNI JEAN BRYAN** was appointed and qualified as ADMINISTRATRIX of the estate of **DAVID L BRYAN**, deceased. Bond was 500,000.00.

John R Spires
Clerk of the Harrison County Commission

Wednesday, August 24, 2022

Confirmed

Estate: 10572

United States of America

A-2

State of West Virginia

County of Harrison, ss:

Clerk's Fiduciary Report

Estate from Wednesday, August 17, 2022, through Tuesday, August 23, 2022

The County Commission of Harrison County this day proceeded to examine the report of the Clerk of the Commission of the Fiduciary and Probate matters had before his during the vacation of the Commission, and it appearing to the Commission that all of the proceedings had therefore ordered that the said report and matters thereto contained be and the same is hereby ratified and confirmed. Said report is in words and figures as follows, to -wit:

On, Thursday, August 18, 2022, the following matters were disposed of in the presence of the Clerk:

The last will and testament of **WILLIAM CLAY WYMER**, deceased, was proved by the affidavit of the attesting witnesses and the same was admitted to probate and record.

WILLIAM E WYMER, who was named in the last will and testament of **WILLIAM CLAY WYMER**, deceased, as EXECUTOR thereof, qualified as such. No bond was required.

More than 31 days since the date of death or the surviving spouse or heir, upon a motion, **AUSTIN HAYES** was appointed and qualified as CO ADMINISTRATOR of the estate of **HARLAN CARTER HAYES**, deceased. Bond was 1,000.00.
More than 31 days since the date of death or the surviving spouse or heir, upon a motion, **QUINETTA MURPHY** was appointed and qualified as CO ADMINISTRATRIX of the estate of **HARLAN CARTER HAYES**, deceased. Bond was 1,000.0 0.

A duly certified copy of the last will and testament of **JAMES MITCHELL BARNA**, deceased, late a resident of Preston, West Virginia, was admitted to record.

On, Friday, August 19, 2022, the following matters were disposed of in the presence of the Clerk:

The said estate of **DOLORES WILDA POWELL**, deceased was referred to **ROBERT L GREER**, a FIDUCIARY COMMISSIONER for the Harrison County, for settlement thereof.

On, Monday, August 22, 2022, the following matters were disposed of in the presence of the Clerk:

The said estate of **RUTH RICE**, deceased was referred to **JAMES A VARNER**, a FIDUCIARY COMMISSIONER for the Harrison County, for settlement thereof.

More than 31 days since the date of death or the surviving spouse or heir, upon a motion, **AMBERLE MCWATTERS** was appointed and qualified as ADMINISTRATRIX of the estate of **NATANIS AKELA CHAPMAN JR**, deceased. Bond was 62,0 00.00.

The last will and testament of **NELSON JAY FOGG**, deceased, was proved by the affidavit of the attesting witnesses and the same was admitted to probate and record.

TAMMY LANTZ, who was named in the last will and testament of **NELSON JAY FOGG**, deceased, as EXECUTRIX thereof, qualified as such. No bond was required.

On, Tuesday, August 23, 2022, the following matters were disposed of in the presence of the Clerk:

The last will and testament of **JEROME FERDINAND BIESCZAD**, deceased, was proved by the affidavit of the attesting witnesses and the same was admitted to probate and record.

HELEN L QUICKLE, who was named in the last will and testament of **JEROME FERDINAND BIESCZAD**, deceased, as EXECUTRIX thereof, qualified as such. No bond was required.

A duly certified copy of the last will and testament of **CLARA J BARRON**, deceased, late a resident of Lewis, West Virginia, was admitted to record.

A duly exemplified copy of the last will and testament of **PATRICIA TERANGO**, deceased, late a resident of BROWARD, FLORIDA, was admitted to record.

A duly exemplified copy of the last will and testament of **DEBORAH K SCANLON**, deceased, late a resident of ST. LUCIE, FLORIDA, was admitted to record.

John R Spires
Clerk of the Harrison County Commission

Wednesday, August 31, 2022

Confirmed

C-1

Enlarged Hepzibah PSD

Regular Board Meeting

Monday, July 11, 2022

With due notice published and a quorum present, Darlene Swiger called the meeting to order: ROLL CALL

Present	**Employees**	**Also Present**
Darlene Swiger	Kevin Short	Shelby Johnson
Fred Martin		Tom Marion

1. **Approval of Minutes**
   Fred Martin made a motion to approve the minutes for Monday, July 11, 2022 as read. Darlene Swiger seconded the motion. All in favor, none opposed and none abstained.

2. **Signing of Checks**
   Darlene Swiger made a motion to approve the Checks Signed Document dated 06/01/22 through 06/28/22. Fred Martin seconded the motion. All in favor, none opposed and none abstained.

3. **Hepzibah Water Project**
   Shelby Johnson and Tom Marion was present to discuss with the Board an updated cost for the Water System Improvement Project. Now, we are waiting on the request for authorization to bid that should take around 20 days, and once we receive authorization to bid, we will receive authorization to advertise. Tom Marion presented the Board with an Engineering amendment for the final Design increase of $30,000 with a total cost increase of $61,500. Kevin, Shelby, Tom, and the Board discussed this in detail.
   Darlene Swiger made a motion to sign the Water System Improvement Project Draft Schedule B. Fred Martin seconded the motion. All in favor, none opposed and none abstained.
   Fred Martin made a motion to sign and approve Amendment #3 to the Engineering Service Agreement with Thrasher Engineering for the Water Improvement Project in the amount of $61,500.00. Darlene Swiger seconded the motion. All in favor, none opposed and none abstained.

4. **Hepzibah Sewer Project**
   Kevin presented the Board with the list of recommendations from Tim Bosley for the following; Erie plant repairs, the Erie plant project, the Spelter plant repairs list and the Spelter plant project list. Tom Marion will update the Sewer Extension contract to include the plants and he will have the updates before the next Board meeting. Kevin, Tom Marion and the Board discussed in detail.

5. **Manager's Report**

A. Kevin provided the Board with Bennett & Dobbins, PLLC agreement to do the PSC work and all the filing for this coming year Audit June 30, 2022. Kevin said they will charge

$5,700 plus travel. Kevin and the Board discussed in detail. **Fred Martin made a motion to approve the services charged by Bennett & Dobbins, PLLC, in the amount of $5,700 dollars, for the year ending June 30, 2022. Darlene Swiger second the motion. All in favor, none opposed and none abstained.**

B. Kevin provided the Board with the title for the Ford F150 to be hauled in for junk. Kevin said we are selling the truck to Jordans Auto for around $350.00 to $500.00 dollars. Darlene Swiger signed the title. Kevin and the Board discussed in detail.

C. Kevin provided the Board with copies of the A/P Aging Summary as of June 30, 2022. Kevin also, provided the Accounts Payable by Aging Period as of June 30, 2022. Kevin provided the Income and Expense by month report for June, 2022 and the Profit & Loss for June, 2022. Kevin provided the Statement of Cash Flows for June, 2022 and discussed in detail.

D. Kevin provided the Board with copies of the Profit & Loss report for July, 2021 through June, 2022 and the Statement of Cash Flows for July, 2021 through June, 2022 and discussed in detail.

E. Kevin provided the Board with a copy of Form EW-104 that is required to be submitted to C&T by July 15th every year. Kevin said the form is to include a list of all the operators for the water and sewer side. Kevin and the Board discussed.

F. Kevin informed the Board that Richard Hite is retiring. His official retirement date is August 1, 2022, but his last day of employment is July 29, 2022. Kevin and the Board discussed in detail.

G. Kevin provided the Board with a copy of the help wanted advertisement for Utility/Field worker. This ad is to run in Clarksburg Exponent newspaper from Sunday, July 17, 2022 thru Friday, July 22, 2022. Kevin said applications will be accepted thru July 29, 2022 until 3:00 pm, After discussion, the Board gave their approval to run the ad.

H. Kevin provided the Board with a copy of our audit report from BHM CPA Group for the year ended, June 30, 2021. Kevin and the Board discussed in detail.

I. Kevin discussed with the Board the June 18, 2022 door hanger/disconnect list. Kevin and the Board discussed in detail.

J. Kevin provided the Board with a copy of the Hepzibah Water Loss Report for July 2021 through July, 2022 per CWB read dates. Kevin said the Water Loss YTD is 26.65%. Kevin and the Board discussed.

K. Kevin presented the Board with the August, 2022 calendar, and discussed.

6. **<u>Next Board Meeting</u>**

Fred Martin announced the next board meeting will be August 8, 2022

7. **Adjournment**

There being no further business, **Fred Martin made a motion to adjourn the meeting. Darlene Swiger seconded the motion. All in favor, none opposed, and none abstained.**

Darlene Swiger
Chairman

Sharon Hamilton
Treasurer

Secretary

jd

Enlarged Hepzibah PSD
Profit & Loss
July 2022

C-2

	Jul 22
Income	
1500 · Late Fees	782.34
1501 · Metered Sales	30,547.41
4610 · Metered Water Sales	60,569.01
4700 · Water Late Fees	872.47
4741 · Reconnect Fees	200.00
4744 · Misc Water Income	200.00
4746 · Credit Card Charges	635.61
Total Income	93,806.84
Gross Profit	93,806.84
Expense	
1704 · Utilities - Sewer Plant	180.66
1726 · Maint of Sewer Plant	2,699.86
1743 · Transportation Expense	1,426.63
1781 · Accounting & Legal	1,396.96
1789 · Petty Cash	100.00
1790 · Postage	466.72
1793 · Supplies	197.21
1794 · Uniforms	290.81
1795 · Telephone	328.49
1796 · Outside Services	6,670.50
1799 · Advertising	36.35
1804 · Regulatory	320.00
1805 · Sludge Disposal	715.00
6020 · Purchased Water	18,104.39
66000 · Payroll Expenses	21,128.41
6661 · Water Testing	550.99
6662 · Power & Fuel	
6662.1 · HREA	1,461.48
6662.2 · Mon Power	2,257.96
Total 6662 · Power & Fuel	3,719.44
9210 · Office Supplies	547.73
9260 · Pensions & Benefits	3,659.30
Total Expense	62,539.45
Net Income	**31,267.39**

Enlarged Hepzibah PSD
A/P Aging Summary
As of July 31, 2022

	Current	1 - 30	31 - 60	61 - 90	> 90	TOTAL
Ace Hardware	78.27	0.00	0.00	0.00	0.00	78.27
ACE HARDWARE OF SALEM	60.53	0.00	0.00	0.00	0.00	60.53
Bennett & Dobbins PLLC	850.00	0.00	0.00	0.00	46,259.08	47,109.08
CINTAS	0.00	0.00	0.00	0.00	-48.30	-48.30
CITCO	3,235.00	0.00	0.00	0.00	0.00	3,235.00
City of Shinnston	26.70	0.00	0.00	0.00	0.00	26.70
Clarksburg Water Board	18,150.39	0.00	0.00	0.00	41,224.44	59,374.83
Core & Main LP	3,600.01	0.00	0.00	0.00	0.00	3,600.01
Enlarged Hepzibah PSD	153.96	0.00	0.00	0.00	0.00	153.96
Hart Office Solutions	77.50	0.00	0.00	0.00	0.00	77.50
Miss Utility of WV, Inc.	49.15	0.00	0.00	0.00	0.00	49.15
Mon Power	2,008.21	0.00	0.00	0.00	0.00	2,008.21
Sun Valley Public Service District	3,748.00	0.00	0.00	0.00	19,152.90	22,900.90
The Exponent Telegram	36.35	0.00	0.00	0.00	0.00	36.35
USA Bluebook	1,933.10	0.00	0.00	0.00	0.00	1,933.10
TOTAL	34,007.17	0.00	0.00	0.00	106,588.12	140,595.29

C-3

GHCPSD - WATER DIVISION
INCOME STATEMENT
FOR THE PERIOD
07/01/2022 - 07/31/2022

	ACTUAL	BUDGET	VARIANCE	% OF TOTAL
INCOME				
DOMESTIC SERVICE/LATE CHGS	192,212.61	207,153.33	(14,940.72)	95.59%
FACILITIES CHARGE	-	-	-	0.00%
INTEREST INCOME	33.76	38.33	(4.57)	0.02%
MISCELLANEOUS/RECONNECT FEES	4,223.38	111.67	4,111.71	2.10%
QUIET DELL LEASE	-	500.00	(500.00)	0.00%
TAP FEES	4,600.00	487.50	4,112.50	2.29%
UNUSUAL CHARGE	-	-	-	0.00%
TOTAL INCOME	201,069.75	208,290.83	(7,221.08)	
EXPENSES				
ACCT, BILLING, & COLLECTING	4,591.28	6,147.50	(1,556.22)	2.49%
BRIDGEPORT SANITARY BOARD	-	-	-	0.00%
TOWN OF WORTHINGTON	-	-	-	0.00%
CHEMICALS	145.00	222.50	(77.50)	0.08%
CLARKSBURG SANITARY BOARD	-	-	-	0.00%
DEBT SERVICE	24,610.85	27,929.33	(3,318.48)	13.34%
DIRECTORS FEES	440.63	489.58	(48.95)	0.24%
EMP. BEN./GROUP INSURANCE/PENSION COSTS	6,638.56	6,176.25	462.31	3.60%
LAB SERVICE	436.53	953.33	(516.80)	0.24%
LABOR	30,146.67	31,048.58	(901.91)	16.35%
MAINTENANCE	10,856.98	14,513.33	(3,656.35)	5.89%
MISCELLANEOUS EXPENSE	-	841.67	(841.67)	0.00%
OFFICE SUPPLIES & EXPENSE	254.80	256.67	(1.87)	0.14%
OUTSIDE SERVICES/CONTRACT LABOR	3,267.50	5,728.33	(2,460.83)	1.77%
POWER PURCHASED	3,123.24	4,091.67	(968.43)	1.69%
PROPERTY/LIABILITY & INJURIES INSURANCE	6,122.66	2,057.50	4,065.16	3.32%
REGULATORY COMMISSION	5,198.99	875.00	4,323.99	2.82%
RENEWAL & REPLACEMENT	-	5,194.17	(5,194.17)	0.00%
RENT EXPENSE	2,500.00	2,500.00	-	1.36%
TAXES	2,607.69	2,412.67	195.02	1.41%
TRANSPORTATION	4,322.95	4,394.17	(71.22)	2.34%
UTILITIES	528.45	824.17	(295.72)	0.29%
WATER PURCHASED	78,627.71	85,862.58	(7,234.87)	42.64%
TOTAL EXPENSES	184,420.49	202,519.00	(18,098.51)	
NET SURPLUS (DEFICIT)	16,649.26	5,771.83	10,877.43	

GHCPSD - SEWER DIVISION
INCOME STATEMENT
FOR THE PERIOD
07/01/2022 - 07/31/2022

	ACTUAL	BUDGET	VARIANCE	% OF TOTAL
INCOME				
DOMESTIC SERVICE/LATE CHGS	242,962.85	229,330.00	13,632.85	83.51%
FACILITIES CHARGE	2,500.00	2,500.00	-	0.86%
INTEREST INCOME	74.19	64.17	10.02	0.03%
MISCELLANEOUS/RECONNECT FEES	-	-	-	0.00%
QUIET DELL LEASE	-	-	-	0.00%
TAP FEES	1,350.00	1,850.00	(500.00)	0.46%
UNUSUAL CHARGE	44,040.55	17,990.00	26,050.55	15.14%
TOTAL INCOME	290,927.59	251,734.17	39,193.42	
EXPENSES				
ACCT, BILLING, & COLLECTING	1,435.90	1,459.92	(24.02)	0.71%
BRIDGEPORT SANITARY BOARD	-	6,030.83	(6,030.83)	0.00%
TOWN OF WORTHINGTON	-	12,500.00	(12,500.00)	0.00%
CHEMICALS	190.00	457.50	(267.50)	0.09%
CLARKSBURG SANITARY BOARD	1,873.40	2,378.33	(504.93)	0.93%
DEBT SERVICE	112,379.86	112,119.92	259.94	55.59%
DIRECTORS FEES	959.37	293.75	665.62	0.47%
EMP. BEN./GROUP INSURANCE/PENSION COSTS	5,414.39	8,179.67	(2,765.28)	2.68%
LAB SERVICE	406.17	594.17	(188.00)	0.20%
LABOR	15,936.19	22,163.42	(6,227.23)	7.88%
MAINTENANCE	22,882.88	15,617.08	7,265.80	11.32%
MISCELLANEOUS EXPENSE	-	-	-	0.00%
OFFICE SUPPLIES & EXPENSE	715.19	1,358.33	(643.14)	0.35%
OUTSIDE SERVICES/CONTRACT LABOR	13,174.98	16,211.67	(3,036.69)	6.52%
POWER PURCHASED	10,599.33	15,188.25	(4,588.92)	5.24%
PROPERTY/LIABILITY & INJURIES INSURANCE	4,993.59	1,454.50	3,539.09	2.47%
REGULATORY COMMISSION	5,916.39	1,351.42	4,564.97	2.93%
RENEWAL & REPLACEMENT	-	12,540.17	(12,540.17)	0.00%
RENT EXPENSE	-	-	-	0.00%
TAXES	786.67	1,937.08	(1,150.41)	0.39%
TRANSPORTATION	3,525.77	2,951.75	574.02	1.74%
UTILITIES	972.22	1,176.67	(204.45)	0.48%
WATER PURCHASED	-	-	-	0.00%
TOTAL EXPENSES	202,162.30	235,964.42	(33,802.12)	
NET SURPLUS (DEFICIT)	88,765.29	15,769.75	72,995.54	

GHCPSD - COMBINED
INCOME STATEMENT
FOR THE PERIOD
07/01/2022 - 07/31/2022

	ACTUAL	BUDGET	VARIANCE	% OF TOTAL
INCOME				
DOMESTIC SERVICE/LATE CHGS	435,175.46	436,483.33	(1,307.87)	88.45%
FACILITIES CHARGE	2,500.00	2,500.00	-	0.51%
INTEREST INCOME	107.95	102.50	5.45	0.02%
MISCELLANEOUS/RECONNECT FEES	4,223.38	111.67	4,111.71	0.86%
QUIET DELL LEASE	-	500.00	(500.00)	0.00%
TAP FEES	5,950.00	2,337.50	3,612.50	1.21%
UNUSUAL CHARGE	44,040.55	17,990.00	26,050.55	8.95%
TOTAL INCOME	491,997.34	460,025.00	31,972.34	
EXPENSES				
ACCT, BILLING, & COLLECTING	6,027.18	7,607.42	(1,580.24)	1.56%
BRIDGEPORT SANITARY BOARD	-	6,030.83	(6,030.83)	0.00%
TOWN OF WORTHINGTON	-	12,500.00	(12,500.00)	0.00%
CHEMICALS	335.00	680.00	(345.00)	0.09%
CLARKSBURG SANITARY BOARD	1,873.40	2,378.33	(504.93)	0.48%
DEBT SERVICE	136,990.71	140,049.25	(3,058.54)	35.44%
DIRECTORS FEES	1,400.00	783.33	616.67	0.36%
EMP. BEN./GROUP INSURANCE/PENSION COSTS	12,052.95	14,355.92	(2,302.97)	3.12%
LAB SERVICE	842.70	1,547.50	(704.80)	0.22%
LABOR	46,082.86	53,212.00	(7,129.14)	11.92%
MAINTENANCE	33,739.86	30,130.42	3,609.44	8.73%
MISCELLANEOUS EXPENSE	-	841.67	(841.67)	0.00%
OFFICE SUPPLIES & EXPENSE	969.99	1,615.00	(645.01)	0.25%
OUTSIDE SERVICES/CONTRACT LABOR	16,442.48	21,940.00	(5,497.52)	4.25%
POWER PURCHASED	13,722.57	19,279.92	(5,557.35)	3.55%
PROPERTY/LIABILITY & INJURIES INSURANCE	11,116.25	3,512.00	7,604.25	2.88%
REGULATORY COMMISSION	11,115.38	2,226.42	8,888.96	2.88%
RENEWAL & REPLACEMENT	-	17,734.33	(17,734.33)	0.00%
RENT EXPENSE	2,500.00	2,500.00	-	0.65%
TAXES	3,394.36	4,349.75	(955.39)	0.88%
TRANSPORTATION	7,848.72	7,345.92	502.80	2.03%
UTILITIES	1,500.67	2,000.83	(500.16)	0.39%
WATER PURCHASED	78,627.71	85,862.58	(7,234.87)	20.34%
TOTAL EXPENSES	386,582.79	438,483.42	(51,900.63)	
NET SURPLUS (DEFICIT)	105,414.55	21,541.58	83,872.97	

GREATER HARRISON COUNTY PSD - WATER
Statement of Cash Flows
July 2022

OPERATING ACTIVITIES		
Net Income (Loss)	$	16,649.26
Adjustments to reconcile Net Income		
to net cash provided by operations:		
Accounts Receivable	$	(4,723.38)
Accounts Payable	$	6,853.98
Customer Deposits	$	1,888.62
Due (From) To Sewer Fund	$	(10,027.36)
Net cash provided by Operating Activities	$	10,641.12
INVESTING ACTIVITIES		
Fixed Assets Projects	$	-
	$	-
Net cash provided by Investing Activities	$	-
FINANCING ACTIVITIES		
5.5 Agreement	$	-
Grants	$	-
Net cash provided by Financing Activities	$	-
Net cash increase (decrease)for period	$	10,641.12
Cash at beginning of period	$	1,090,165.60
Cash at end of period	**$**	**1,100,806.72**
Unrestricted Cash	$	610,509.98
Restricted Cash		
Depreciation Reserve	$	346,476.09
Bond Commission Sweep	$	26,503.00
Construction Stevens Run	$	45.00
SB 234	$	45,000.00
Customer Deposits	$	72,272.65
Total Restricted Cash	$	490,296.74
Total Unrestricted & Restricted Cash	**$**	**1,100,806.72**
	$	-

GREATER HARRISON COUNTY PSD - SEWER
Statement of Cash Flows
July 2022

OPERATING ACTIVITIES		
Net Income (Loss)	$	88,765.26
Adjustments to reconcile Net Income		
to net cash provided by operations:		
Accounts Payable	$	(5,495.71)
Customer Deposits	$	3,370.08
Payroll Liabilities	$	7,254.17
Due (From) To Water Fund	$	10,027.36
Net cash provided by Operating Activities	$	103,921.16
INVESTING ACTIVITIES		
1450 · WORK IN PROGRESS:Row's & Land	$	-
Fixed Assets Project	$	(206,520.10)
Net cash provided by Investing Activities	$	(206,520.10)
FINANCING ACTIVITIES		
	$	-
Sinking Fund Transfers	$	21,364.29
Draw on Bond & Grants	$	206,520.00
Net cash provided by Financing Activities	$	227,884.29
Net cash increase (decrease) for period	$	125,285.35
Cash at beginning of period	$	2,145,093.89
Cash at end of period	**$**	**2,270,379.24**
Unrestricted Cash	$	1,075,285.36
Restricted Cash		
Construction Account	$	1,686.94
Depreciation Reserve	$	933,145.25
Rural Development Reserve	$	25,282.35
Bond Commission Sweep	$	74,139.01
SB 234	$	45,000.00
Customer Deposits	$	115,840.33
Total Restricted Cash	$	1,195,093.88
Total Unrestricted & Restricted Cash	**$**	**2,270,379.24**
	$	-

Sun Valley PSD
General Ledger
WATER INCOME STATEMENT

Title	Account #	BUDGET Month	BUDGET Y-T-D	BALANCE Month	BALANCE Y-T-D	VARIANCE Month	VARIANCE Y-T-D
UTILITY OPERATING INCOME							
OPERATING REVENUES		76,249.00	914,988.00	97,574.75	1071,137.09	(21,325.75)	(156,149.09)
OPERATING EXPENSES							
TYMBER PARK WATER LINE EXT	80 651 025 00	.00	.00	.00	.00	.00	.00
MAINTENANCE OF MAINS							
OPERATION & MAINT. EXPENSE		(56,863.99)	(685,845.60)	(73,093.61)	(778,812.13)	16,229.62	92,966.53
DEPRECIATION	80 403 000 00	.00	.00	.00	.00	.00	.00
SOCIAL SECURITY & MEDICARE	80 408 130 00	(1,446.25)	(17,355.00)	(1,904.72)	(17,540.88)	458.47	185.88
TAXES UTILITY SOCIAL SECURITY	80 408 300 00	.00	.00	.00	.00	.00	.00
TAXES OTHER THAN INCOME TAX	80 408 400 00	.00	.00	.00	.00	.00	.00
Workers Comp. Expense							
TAXES OTHER THAN INCOME TAX	80 408 500 00	(242.36)	(2,908.40)	(1.03)	(694.62)	(241.33)	(2,213.78)
Utility SUI Tax							
TAXES UTILITY MEDICARE	80 408 600 00	.00	.00	.00	.00	.00	.00
OPERATING EXP/OPERATION METERS	80 502 000 00	(357.00)	(4,284.00)	(885.72)	(12,705.11)	528.72	8,421.11
TOTAL OPERATING EXPENSES		(58,909.60)	(710,393.00)	(75,885.08)	(809,752.74)	16,975.48	99,359.74
TOTAL OPERATING INCOME		17,339.40	204,595.00	21,689.67	261,384.35	(4,350.27)	(56,789.35)
OTHER INCOME & DEDUCTIONS							
INTEREST & DIVIDEND INCOME	80 419 000 00	4.00	48.00	3.95	41.03	.05	6.97
avings,CD's, etc.)							
EVENUE FROM SINKING & OTHER	80 420 000 00	.00	.00	.00	.00	.00	.00
MISC NONOPERATING INCOME	80 421 000 00	.00	.00	.00	.00	.00	.00
HEPZIBAH PYMT CURRENT INVOICES	80 421 050 00	2,707.50	32,490.00	2,623.60	28,071.48	83.90	4,418.52
LOSS ON DISPOSAL OF ASSETS	80 422 000 00	.00	.00	.00	.00	.00	.00
SPECIAL FUNDING - OPEB	80 423 000 00	.00	.00	.00	.00	.00	.00
TOTAL OTHER INCOME & DEDUCTIO		2,711.50	32,538.00	2,627.55	28,112.51	83.95	4,425.49
INTEREST CHARGES							
INTEREST ON LONG TERM DEBT	80 427 000 00	.00	.00	.00	.00	.00	.00
CAPITAL LEASE INTEREST	80 427 100 00	.00	.00	.00	.00	.00	.00
BOND PAYMENTS WATER	80 427 200 00	(15,284.50)	(183,414.00)	(30,239.54)	(304,311.54)	14,955.04	120,897.54
AMORT EXPENSE	80 428 000 00	.00	.00	.00	.00	.00	.00
OTHER INTEREST EXPENSE	80 431 000 00	(17.00)	(204.00)	.00	(17.88)	(17.00)	(186.12)
(Deposit Refunds)							
TOTAL INTEREST CHARGES		(15,301.50)	(183,618.00)	(30,239.54)	(304,329.42)	14,938.04	120,711.42
NET INCOME		4,749.40	53,515.00	(5,922.32)	(14,832.56)	10,671.72	68,347.56

TLE	ACCOUNT #	THIS MONTH DETAIL	THIS MONTH BALANCE	THIS MONTH TOTAL	YEAR-TO-DATE DETAIL	YEAR-TO-DATE BALANCE	YEAR-TO-DATE TOTAL
UTILITY OPERATING INCOME							
OPERATING REVENUES			42,877.91			509,299.80	
OPERATING REVENUE DEDUCTIONS							
OPERATING EXPENSES			(23,341.81)			(306,187.23)	
DEPRECIATION EXPENSE	81 503 000 00		.00			.00	
AMORTIZATION EXPENSE	81 811 001 00		.00			.00	
UNEMPLOYMENT TAX	81 507 100 00		(14.86)			(393.67)	
WORKERS COMP	81 507 200 00		.00			.00	
SOCIAL SECURITY & MEDICARE	81 507 300 00		(844.88)			(7,749.48)	
RETIREMENT	81 507 400 00		(997.77)			(9,045.53)	
HEALTH INSURANCE	81 507 500 00		(1,750.20)			(21,107.40)	
RHBT (OBEB) EXPENSE	81 507 600 00		.00			.00	
TOTAL OPERATING REVENUE DED.			(26,949.52)			(344,483.31)	
TOTAL OPERATING INCOME			15,928.39			164,816.49	
OTHER INCOME							
INTEREST INCOME	81 524 000 00		.02			.24	
REVENUE FROM SINKING & OTHER	81 525 000 00		.00			.00	
MISC. NON OPERATING INCOME	81 615 000 00		.00			.00	
MISCELLANEOUS REVENUE	81 527 000 00		.00			.00	
PZIBAH PAYMENT INVOICES SEW	81 527 100 00		1,124.40			13,233.20	
KE FLOYD PAYMENT O&M AGR INV MONTHLY O&M INVOICE	81 527 150 00		3,696.00			3,696.00	
TOTAL OTHER INCOME			4,820.42			16,929.44	
GROSS INCOME			20,748.81			181,745.93	
INCOME DEDUCTIONS							
OTHER INTEREST CHARGES (ON SEC. DEP. REFUNDS, ETC.)	81 535 000 00		.00			(13.17)	
CAPITAL LEASE INTEREST	81 535 100 00		.00			.00	
BOND PAYMENTS SEWER	81 535 200 00		(15,545.15)			(202,670.90)	
TOTAL INCOME DEDUCTIONS			(15,545.15)			(202,684.07)	
NET INCOME			5,203.66			(20,938.14)	

C-5

BINGAMON PUBLIC SERVICE DISTRICT
PO BOX 35, SHINNSTON, WV 26431
MICHAEL R SIEBER, CHAIRMAN EDWARD HILDRETH, JR, SECRETARY
BRAD FORTNEY, TREASURER

July 18th, 2022

The monthly meeting of the Bingamon Public Service District (BPSD) Board of Directors was held on July 18th, 2022, at the Bingamon Public Service District office trailer.

CALL TO ORDER: The meeting was called to order at 6:37 p.m. by Chairman Michael Sieber.

ROLL CALL: Board members present: Edward (Bud) Hildreth, Jr., Brad Fortney, and Michael Sieber. BPSD staff Plant Manager, Rusty Kuhens, Office Manager, Teresa Basnett and Jason Basnett.

READING OF THE MINUTES - Minutes from the June 20th, 2022, BPSD board meeting were distributed. Mr. Sieber called for any corrections or additions to the minutes. ***A motion was made by Michael Sieber, seconded by Brad Fortney, to accept the minutes as published. The motion carried unanimously.***

TREASURER'S REPORT – Board members reviewed the Treasurer's Report. The bank balance as of June 30th, 2022, was $78,796.00 Accounts receivable for the month totaled $ 6,797.70

- Current outstanding bills were reviewed. ***A motion was made by Mike Sieber and seconded by Brad Fortney, to pay the current bills. The motion was passed unanimously.***

OFFICE MANAGER'S REPORT - Mrs. Teresa Basnett, Office Manager

- City National Bank MMA earned $ 4.14 in interest and totals $74,249.51
- City National Bank Reserve Account earned $2.45 in interest and totals $44,017.08
- The Renewal/Replacement Acct. at BB&T earned $.09 in interest totals $11,395.11
- WesBanco day of meeting balance $87,171.55
- 24 hour notices this month totaled 32. $3,977.52 was collected out of the $10,261.21. 2 were turned off for nonpayment. 1 made a payment agreement, 1 pledge was made through the DHHR. Payments were received from 24 customers total. 7 made no payment at all.
- Mrs. Basnett said online payments were over $5,686.26 so far this month.
- Mrs. Basnett stated that over $1400.00 has been pledged through the DHHR.

- Mrs. Basnett typed up a Wavier and release of lien for the City of Shinnston. The document was for the PSD's adjusted bill. It was signed and notarized by the City Manager prior to the ending of the fiscal year.

- Mrs. Basnett mentioned that no customers had viewed the CCR report on the website.

PLANT OPERATOR'S REPORT - Mr. Rusty Kuhens, Plant Operator

- Mr Kuhens reported 3 leaks were repaired this month.

- Mr. Kuhens said D&G Machine still hasn't finished work on the Pump for Whetstone Pumphouse.

SAFETY COMMITTEE MEETING: Electrical Safetly

OLD BUSINESS: Kevin Kellar filed a Formal Complaint with the PSC. Both parties have filled out Mediation participation forms.

NEW BUSINESS: None voiced

NEXT MONTHLY BPSD BOARD MEETING – The next regularly scheduled BPSD board meeting will be held @ the office trailer on August 15th, 2022 @ 6:30 PM

ADJOURNMENT – The meeting was adjourned at 7:37 pm upon a ***motion by Brad Fortney, seconded by Mike Sieber, and carried unanimously***.

Michael Sieber, Chairman

Teresa Basnett, Office Manager

03:01 PM AUG 15 2022 EXEC SEC DIV

C-6

P.S.C. W. Va. No. 35
Canceling P.S.C. W. Va. No. 34

SUN VALLEY PUBLIC SERVICE DISTRICT, a public utility
OF

REYNOLDSVILLE, WEST VIRGINIA

RATES, RULES AND REGULATIONS FOR FURNISHING

WATER

at Sun Valley, Reynoldsville, Wilsonburg, Wolf Summitt, Davisson Run and vicinities in Harrison County, West Virginia

Filed with THE PUBLIC SERVICE COMMISSION
of
WEST VIRGINIA

Issued July 26, 2022

Effective for all service rendered on and after July 20, 2022.

Issued by authority of an order of the
Public Service Commission of West Virginia
in Case No. 22-0029-PWD-19A final
July 20, 2022.

Issued by SUN VALLEY PUBLIC SERVICE DISTRICT, a public utility

By _____

Chairman
Title

RULES AND REGULATIONS

I. Rules and Regulations for the Government of Water Utilities, adopted by the Public Service Commission of West Virginia, and now in effect, and all amendments thereto and modifications thereof hereafter made by said Commission.

APPLICABILITY

Applicable within the entire territory served.

AVAILABILITY

Available for general domestic, commercial, industrial and sale for resale service.

(I) RATES (Customers with metered water supply)

First	3,000 gallons used per month	$17.09 per 1,000 gallons
Next	3,000 gallons used per month	$16.40 per 1,000 gallons
Next	3,000 gallons used per month	$15.80 per 1,000 gallons
Next	6,000 gallons used per month	$15.30 per 1,000 gallons
Next	22,500 gallons used per month	$13.06 per 1,000 gallons
Over	37,500 gallons used per month	$11.83 per 1,000 gallons

(I) MINIMUM CHARGE

No bill will be rendered for less than the following, based on meter size:

5/8 inch meter	$ 51.27 per month
1 inch meter	$ 128.18 per month
1- ½ inch meter	$ 256.35 per month
2 inch meter	$ 410.16 per month
3 inch meter	$ 820.32 per month
4 inch meter	$ 1,281.75 per month
6 inch meter	$ 2,563.50 per month
8 inch meter	$ 4,101.60 per month

(I) TRANSPORTATION RATE

$0.65 per 1,000 gallons

DELAYED PAYMENT PENALTY

The above schedule is net. On all accounts not paid in full when due, ten percent (10%) will be added to the net current amount unpaid. This delayed penalty is not interest and is to be collected only once for each bill where it is appropriate.

(I) Indicates increase

TAP FEE

The following charges are to be made whenever the utility installs a new tap to serve an applicant.

A tap fee of $50.00 will be charged to customers who apply for service before construction is completed adjacent to the customer's premises in connection with a certificate proceeding before the Commission. This pre-construction tap fee will be invalid after the completion of construction adjacent to an applicant's premises that is associated with a certificate proceeding.

A tap fee of $450.00 will be charged to all customers who apply for service outside of a certificate proceeding before the Commission for each new tap to the system.

(I) PRIVATE FIRE PROTECTION

$81.18 per month on all unmetered private fire service connection lines.

RECONNECTION $25.00

To be charged whenever the supply of water is turned off for violations of rules, non-payment of bills, or fraudulent use of water.

(I, C) LEAK ADJUSTMENT

$5.15 per 1,000 gallons is to be used when the bill reflects unusual water consumption which can be attributed to eligible leakage on the customer's side of the meter. This rate shall be applied to all such consumption above 200% of the customer's historical average usage.

RETURNED CHECK CHARGE

A service charge equal to the actual bank fee assessed to the utility up to a maximum of $25.00 will be imposed upon any customer whose check for payment of charges is returned by the bank due to insufficient funds.

SECURITY DEPOSIT

Not to exceed two-twelfths (2/12) of the average annual usage of the applicant's specific customer class, or fifty dollars, whichever is greater. This fee may be changed by applicable statutory provisions.

(I) Indicates increase
(C) Indicates change in text

TERMINATION SERVICE

Per the service termination agreement with Lake Floyd Public Service District (Lake Floyd), a disconnection fee of $25.00 for each termination will be charged to Lake Floyd whenever water service has been terminated for non-payment of Lake Floyd's sewer bills.

Per the service termination agreement with Lake Floyd Public Service District (Lake Floyd), a reconnection fee of $25.00 for each restored service will be charged to Lake Floyd whenever water service has been reconnected which had been previously terminated for non-payment of Lake Floyd's sewer bills.

02:55 PM AUG 15 2022 EXEC SEC DIV

C-7

P.S.C. W.Va. No. 21
Cancelling P.S.C. W. Va. No. 20

SUN VALLEY PUBLIC SERVICE DISTRICT, a public utility

OF

REYNOLDSVILLE, WEST VIRGINIA

RATES, RULES AND REGULATIONS FOR FURNISHING

SEWERAGE AND SEWAGE DISPOSAL SERVICE

at Liberty, Wilsonburg, O'Neill and Chiefton areas of Harrison County, West Virginia

Filed with **THE PUBLIC SERVICE COMMISSION**
of
WEST VIRGINIA

Issued July 26, 2022

Effective for all service rendered on or after July 20, 2022.

Issued by authority of an order the Public Service Commission of West Virginia in Case No. 22-0030-PSD-19A final July 20, 2022.

Issued by SUN VALLEY PUBLIC ~~SERVICE DISTRICT~~, a public utility

By _____

Chairman

Title

RULES AND REGULATIONS

I. Rules and Regulations for the Government of Sewerage Utilities, adopted by the Public Service Commission of West Virginia, and now in effect, and all amendments thereto and modifications thereof hereafter made by said Commission.

APPLICABILITY

Applicable within the entire territory served.

AVAILABILITY

Available for general domestic, commercial, and industrial service.

(I) RATES

$16.79 per thousand gallons of water used per month.

(I) FLAT RATE CHARGE

Equivalent of 4,500 gallons of water usage - $75.56 per month.

(I) MINIMUM CHARGE

No bill will be rendered for less than $33.58 per month.

RETURNED CHECK CHARGE

A service charge equal to the actual bank fee assessed to the sewer utility of $25.00 will be imposed upon any customer whose check for payment of charges is returned by the bank due to insufficient funds.

DISCONNECT/RECONNECT/ADMINISTRATIVE FEES

Whenever water service has been disconnected for non-payment of sewer bills in conjunction with a water service termination agreement with the City of Clarksburg, a disconnection fee of $20.00 shall be charged; or in the event a delinquent sewer bill is collected by the water company, an administrative fee of $20.00 shall be charged.

Whenever water service, which has been previously disconnected or otherwise withheld for non-payment of a sewer bill in conjunction with a water service termination agreement with the City of Clarksburg, is reconnected, a reconnection fee of $20.00 shall be charged.

(I) Indicates increase

DELAYED PAYMENT PENALTY

The above payment is net. On all accounts not paid in full when due, ten percent will be added to the net current amount unpaid. This delayed payment penalty is not interest and is to be collected only once for each bill where it is appropriate.

TAP FEE

The following charge is to be made whenever the utility installs a new tap to serve an applicant.

A tap fee of $300.00 will be charged to customers applying for service outside of a certificate proceeding before the Commission for each new tap to the system.

(I, C) LEAK ADJUSTMENT

$4.94 per 1,000 gallons of water is to be used when a bill reflects unusual consumption which can be attributed to eligible leakage on customer's side of meter. This rate shall be applied to all such consumption above 200% of the customer's historical average water usage.

SECURITY DEPOSIT

Not to exceed two-twelfths (2/12) of the average annual usage of the applicant's specific customer class, or fifty dollars, whichever is greater. This fee may be changed by applicable statutory provisions.

(I) Indicates increase
(C) Indicates change in text

C-8

EAST VIEW PUBLIC SERVICE DISTRICT
1655 PHILIPPI PIKE
CLARKSBURG, WV 26301

MEETING MINUTES

The regular meeting of the East View Public Service District was held on AUGUST 9th, 2022 AT NOON.

Those in attendance: Michael Blake, Thomas Bryant, Dawn Hogue, Dave Layton, Laura Guzzi and Todd Lancaster, Jane Bryant, Jeff Hogue and Scott Hogue.

FINANCIAL:

WV Municipal Bond - $2838
USDA Rural Development Loan - $1081
Clarksburg Water Board - $1993.18
Clarksburg Sanitary Board - $4297.01
Payroll – $4130
CWCR Account - $547
HNB 2.5 % - $432
CWCR-S Account - $291
Frontier - $82
Dominion Energy - $179
Unifirst - $66.88
WV State Auditor - $329
Advantage Computer - $250
Bombardiere Plumbing - $209.10
WV Counties Risk Pool - $1818.50
Bennett & Dobbin - $250
Public Service Commission - $ 844.28
Petrick & Bartlett - $530
Mon Power - $789.71
HNB - $45
Exponet-Telegram - $72
Enterprise Sanitation - $40.83
Federal Deposit - $1035.25 (Withholdings)
State of WV Deposit - $196 Withholdings)
D D Wilson - $252.24
Text-Em-All - $28.89
The Town of Anmoore - $26.89
Miss Utility of WV - $10
Bombardiere Plumbing - $398
Core and Main - $782
USPS $214.50
Misc - $340.40

NEW BUSINESS:

Discussed compiling a list of new projects for fiscal year 2022-2023.

One project that was brought up were an air release installation to each of our systems at the highest point.

1. Discussed a letter received from the State Auditor to Clarksburg's Prosecuting Attorney, Rachael Romano stating that our audit was completed with no action required.

2. Discussed the burden of the cost of the excessive Lead and Copper sampling we are being required to perform on our system that was installed in 1989 and consist of plastic PVC pipe.

OLD BUSINESS:

1. Discussed our renewal of our insurance through WV Counties Risk Pool. First installment of $1818.50 was mailed July 7

2. Discussed our Renewal of our agreement with Bennett and Dobbins, PLLC for our accounting needs.

3. Discussed Tetrick and Bartlett who was in our office on June 21, 2022 and completed our financial audit. We have received our report and it is maintained in the office for review. Results were discussed and resolution of any insufficiencies were addressed.
   We have set up a 9 month payment plan with the first installment of $530 mailed July 7.

4. We are working on obtaining our customer's internal plumbing of their residential houses for a report that will be submitted to the Office of Environmental Health Services for the State of WV. We are preparing our Sampling Site Plan (10 per system) to submit as well.

Form **990**

Department of the Treasury
Internal Revenue Service

Return of Organization Exempt From Income Tax

Under section 501(c), 527, or 4947(a)(1) of the Internal Revenue Code (except private foundations)

▶ Do not enter social security numbers on this form as it may be made public.

▶ Go to www.irs.gov/Form990 for instructions and the latest information.

OMB No. 1545-0047

2021

Open to Public Inspection

A For the 2021 calendar year, or tax year beginning JUL 1, 2021 and ending JUN 30, 2022

B Check if applicable:
- ☐ Address change
- ☐ Name change
- ☐ Initial return
- ☐ Final return/ terminated
- ☐ Amended return
- ☐ Application pending

C Name of organization
SHINNSTON VOLUNTEER FIRE DEPARTMENT

Doing business as

Number and street (or P.O. box if mail is not delivered to street address) | Room/suite
37 BRIDGE STREET

City or town, state or province, country, and ZIP or foreign postal code
SHINNSTON, WV 26431

F Name and address of principal officer: RANDAL E. NUZUM
SAME AS C ABOVE

D Employer identification number

E Telephone number
304.592.1851

G Gross receipts $ 322,639.

H(a) Is this a group return for subordinates? ☐ Yes ☒ No

H(b) Are all subordinates included? ☐ Yes ☐ No
If "No," attach a list. See instructions

H(c) Group exemption number ▶

I Tax-exempt status: ☐ 501(c)(3) ☒ 501(c) (4) ◀ (insert no.) ☐ 4947(a)(1) or ☐ 527

J Website: ▶ N/A

K Form of organization: ☐ Corporation ☐ Trust ☒ Association ☐ Other ▶

L Year of formation: 1976 **M** State of legal domicile: WV

Part I Summary

Activities & Governance

1 Briefly describe the organization's mission or most significant activities: PROVIDES FIREFIGHTING SERVICE FOR SHINNSTON, WEST VIRGINIA AND THE SURROUNDING COMMUNITIES.

2 Check this box ▶ ☐ if the organization discontinued its operations or disposed of more than 25% of its net assets.

3	Number of voting members of the governing body (Part VI, line 1a)	3	7
4	Number of independent voting members of the governing body (Part VI, line 1b)	4	7
5	Total number of individuals employed in calendar year 2021 (Part V, line 2a)	5	0
6	Total number of volunteers (estimate if necessary)	6	0
7a	Total unrelated business revenue from Part VIII, column (C), line 12	7a	2,009.
b	Net unrelated business taxable income from Form 990-T, Part I, line 11	7b	0.

Revenue

		Prior Year	Current Year
8	Contributions and grants (Part VIII, line 1h)	146,010.	105,585.
9	Program service revenue (Part VIII, line 2g)	118,098.	214,625.
10	Investment income (Part VIII, column (A), lines 3, 4, and 7d)	55.	85.
11	Other revenue (Part VIII, column (A), lines 5, 6d, 8c, 9c, 10c, and 11e)	0.	2,344.
12	Total revenue - add lines 8 through 11 (must equal Part VIII, column (A), line 12)	264,163.	322,639.

Expenses

13	Grants and similar amounts paid (Part IX, column (A), lines 1-3)	0.	0.
14	Benefits paid to or for members (Part IX, column (A), line 4)	0.	0.
15	Salaries, other compensation, employee benefits (Part IX, column (A), lines 5-10)	0.	0.
16a	Professional fundraising fees (Part IX, column (A), line 11e)	0.	0.
b	Total fundraising expenses (Part IX, column (D), line 25) ▶ 0.		
17	Other expenses (Part IX, column (A), lines 11a-11d, 11f-24e)	375,238.	244,275.
18	Total expenses. Add lines 13-17 (must equal Part IX, column (A), line 25)	375,238.	244,275.
19	Revenue less expenses. Subtract line 18 from line 12	-111,075.	78,364.

Net Assets or Fund Balances

		Beginning of Current Year	End of Year
20	Total assets (Part X, line 16)	659,094.	688,553.
21	Total liabilities (Part X, line 26)	285,037.	236,132.
22	Net assets or fund balances. Subtract line 21 from line 20	374,057.	452,421.

Part II Signature Block

Under penalties of perjury, I declare that I have examined this return, including accompanying schedules and statements, and to the best of my knowledge and belief, it is true, correct, and complete. Declaration of preparer (other than officer) is based on all information of which preparer has any knowledge.

Sign Here

▶ Signature of officer — Date

▶ RANDAL E. NUZUM, TREASURER
Type or print name and title

Paid Preparer Use Only

Print/Type preparer's name: MARK V. KUNTZ	Preparer's signature	Date: 07/27/22	Check ☒ if self-employed; PTIN: P00128288
Firm's name ▶ MARK V. KUNTZ, CPA, PLLC			Firm's EIN ▶
Firm's address ▶ P. O. BOX 4549 BRIDGEPORT, WV 26330			Phone no. 304.626.5193

May the IRS discuss this return with the preparer shown above? See instructions ☒ Yes ☐ No

SEE SCHEDULE O FOR ORGANIZATION MISSION STATEMENT CONTINUATION

Part III Statement of Program Service Accomplishments

Check if Schedule O contains a response or note to any line in this Part III ☐

1 Briefly describe the organization's mission:
PROVIDES FIREFIGHTING SERVICE FOR SHINNSTON, WEST VIRGINIA AND THE SURROUNDING COMMUNITIES. ADDITIONALLY, THEY PROVIDE FIRST RESPONDER SERVICES FOR THESE SAME COMMUNITIES.

2 Did the organization undertake any significant program services during the year which were not listed on the prior Form 990 or 990-EZ? ☐ Yes ☒ No
If "Yes," describe these new services on Schedule O.

3 Did the organization cease conducting, or make significant changes in how it conducts, any program services? ☐ Yes ☒ No
If "Yes," describe these changes on Schedule O.

4 Describe the organization's program service accomplishments for each of its three largest program services, as measured by expenses. Section 501(c)(3) and 501(c)(4) organizations are required to report the amount of grants and allocations to others, the total expenses, and revenue, if any, for each program service reported.

4a (Code:) (Expenses $ 244,275. including grants of $) (Revenue $ 215,045.)
PROVIDES FIREFIGHTING SERVICE FOR SHINNSTON, WEST VIRGINIA AND THE SURROUNDING COMMUNITIES. ADDITIONALLY, THEY PROVIDE FIRST RESPONDER SERVICES FOR THESE SAME COMMUNITIES.

4b (Code:) (Expenses $ including grants of $) (Revenue $)

4c (Code:) (Expenses $ including grants of $) (Revenue $)

4d Other program services (Describe on Schedule O.)
(Expenses $ including grants of $) (Revenue $)

4e Total program service expenses ▶ 244,275.

Part IV Checklist of Required Schedules

			Yes	No
1	Is the organization described in section 501(c)(3) or 4947(a)(1) (other than a private foundation)? *If "Yes," complete Schedule A*	1		X
2	Is the organization required to complete *Schedule B, Schedule of Contributors*? See instructions	2	X	
3	Did the organization engage in direct or indirect political campaign activities on behalf of or in opposition to candidates for public office? *If "Yes," complete Schedule C, Part I*	3		X
4	**Section 501(c)(3) organizations.** Did the organization engage in lobbying activities, or have a section 501(h) election in effect during the tax year? *If "Yes," complete Schedule C, Part II*	4		
5	Is the organization a section 501(c)(4), 501(c)(5), or 501(c)(6) organization that receives membership dues, assessments, or similar amounts as defined in Rev. Proc. 98-19? *If "Yes," complete Schedule C, Part III*	5		X
6	Did the organization maintain any donor advised funds or any similar funds or accounts for which donors have the right to provide advice on the distribution or investment of amounts in such funds or accounts? *If "Yes," complete Schedule D, Part I*	6		X
7	Did the organization receive or hold a conservation easement, including easements to preserve open space, the environment, historic land areas, or historic structures? *If "Yes," complete Schedule D, Part II*	7		X
8	Did the organization maintain collections of works of art, historical treasures, or other similar assets? *If "Yes," complete Schedule D, Part III*	8		X
9	Did the organization report an amount in Part X, line 21, for escrow or custodial account liability, serve as a custodian for amounts not listed in Part X; or provide credit counseling, debt management, credit repair, or debt negotiation services? *If "Yes," complete Schedule D, Part IV*	9		X
10	Did the organization, directly or through a related organization, hold assets in donor-restricted endowments or in quasi endowments? *If "Yes," complete Schedule D, Part V*	10		X
11	If the organization's answer to any of the following questions is "Yes," then complete Schedule D, Parts VI, VII, VIII, IX, or X, as applicable.			
a	Did the organization report an amount for land, buildings, and equipment in Part X, line 10? *If "Yes," complete Schedule D, Part VI*	11a	X	
b	Did the organization report an amount for investments - other securities in Part X, line 12, that is 5% or more of its total assets reported in Part X, line 16? *If "Yes," complete Schedule D, Part VII*	11b		X
c	Did the organization report an amount for investments - program related in Part X, line 13, that is 5% or more of its total assets reported in Part X, line 16? *If "Yes," complete Schedule D, Part VIII*	11c		X
d	Did the organization report an amount for other assets in Part X, line 15, that is 5% or more of its total assets reported in Part X, line 16? *If "Yes," complete Schedule D, Part IX*	11d		X
e	Did the organization report an amount for other liabilities in Part X, line 25? *If "Yes," complete Schedule D, Part X*	11e		X
f	Did the organization's separate or consolidated financial statements for the tax year include a footnote that addresses the organization's liability for uncertain tax positions under FIN 48 (ASC 740)? *If "Yes," complete Schedule D, Part X*	11f		X
12a	Did the organization obtain separate, independent audited financial statements for the tax year? *If "Yes," complete Schedule D, Parts XI and XII*	12a		X
b	Was the organization included in consolidated, independent audited financial statements for the tax year? *If "Yes," and if the organization answered "No" to line 12a, then completing Schedule D, Parts XI and XII is optional*	12b		X
13	Is the organization a school described in section 170(b)(1)(A)(ii)? *If "Yes," complete Schedule E*	13		X
14a	Did the organization maintain an office, employees, or agents outside of the United States?	14a		X
b	Did the organization have aggregate revenues or expenses of more than $10,000 from grantmaking, fundraising, business, investment, and program service activities outside the United States, or aggregate foreign investments valued at $100,000 or more? *If "Yes," complete Schedule F, Parts I and IV*	14b		X
15	Did the organization report on Part IX, column (A), line 3, more than $5,000 of grants or other assistance to or for any foreign organization? *If "Yes," complete Schedule F, Parts II and IV*	15		X
16	Did the organization report on Part IX, column (A), line 3, more than $5,000 of aggregate grants or other assistance to or for foreign individuals? *If "Yes," complete Schedule F, Parts III and IV*	16		X
17	Did the organization report a total of more than $15,000 of expenses for professional fundraising services on Part IX, column (A), lines 6 and 11e? *If "Yes," complete Schedule G, Part I.* See instructions	17		X
18	Did the organization report more than $15,000 total of fundraising event gross income and contributions on Part VIII, lines 1c and 8a? *If "Yes," complete Schedule G, Part II*	18		X
19	Did the organization report more than $15,000 of gross income from gaming activities on Part VIII, line 9a? *If "Yes," complete Schedule G, Part III*	19		X
20a	Did the organization operate one or more hospital facilities? *If "Yes," complete Schedule H*	20a		X
b	If "Yes" to line 20a, did the organization attach a copy of its audited financial statements to this return?	20b		
21	Did the organization report more than $5,000 of grants or other assistance to any domestic organization or domestic government on Part IX, column (A), line 1? *If "Yes," complete Schedule I, Parts I and II*	21		X

Part IV Checklist of Required Schedules *(continued)*

			Yes	No
22	Did the organization report more than $5,000 of grants or other assistance to or for domestic individuals on Part IX, column (A), line 2? *If "Yes," complete Schedule I, Parts I and III*	22		X
23	Did the organization answer "Yes" to Part VII, Section A, line 3, 4, or 5, about compensation of the organization's current and former officers, directors, trustees, key employees, and highest compensated employees? *If "Yes," complete Schedule J*	23		X
24a	Did the organization have a tax-exempt bond issue with an outstanding principal amount of more than $100,000 as of the last day of the year, that was issued after December 31, 2002? *If "Yes," answer lines 24b through 24d and complete Schedule K. If "No," go to line 25a*	24a		X
b	Did the organization invest any proceeds of tax-exempt bonds beyond a temporary period exception?	24b		
c	Did the organization maintain an escrow account other than a refunding escrow at any time during the year to defease any tax-exempt bonds?	24c		
d	Did the organization act as an "on behalf of" issuer for bonds outstanding at any time during the year?	24d		
25a	**Section 501(c)(3), 501(c)(4), and 501(c)(29) organizations.** Did the organization engage in an excess benefit transaction with a disqualified person during the year? *If "Yes," complete Schedule L, Part I*	25a		X
b	Is the organization aware that it engaged in an excess benefit transaction with a disqualified person in a prior year, and that the transaction has not been reported on any of the organization's prior Forms 990 or 990-EZ? *If "Yes," complete Schedule L, Part I*	25b		X
26	Did the organization report any amount on Part X, line 5 or 22, for receivables from or payables to any current or former officer, director, trustee, key employee, creator or founder, substantial contributor, or 35% controlled entity or family member of any of these persons? *If "Yes," complete Schedule L, Part II*	26		X
27	Did the organization provide a grant or other assistance to any current or former officer, director, trustee, key employee, creator or founder, substantial contributor or employee thereof, a grant selection committee member, or to a 35% controlled entity (including an employee thereof) or family member of any of these persons? *If "Yes," complete Schedule L, Part III*	27		X
28	Was the organization a party to a business transaction with one of the following parties (see the Schedule L, Part IV, instructions for applicable filing thresholds, conditions, and exceptions):			
a	A current or former officer, director, trustee, key employee, creator or founder, or substantial contributor? *If "Yes," complete Schedule L, Part IV*	28a		X
b	A family member of any individual described in line 28a? *If "Yes," complete Schedule L, Part IV*	28b		X
c	A 35% controlled entity of one or more individuals and/or organizations described in line 28a or 28b? *If "Yes," complete Schedule L, Part IV*	28c		X
29	Did the organization receive more than $25,000 in non-cash contributions? *If "Yes," complete Schedule M*	29		X
30	Did the organization receive contributions of art, historical treasures, or other similar assets, or qualified conservation contributions? *If "Yes," complete Schedule M*	30		X
31	Did the organization liquidate, terminate, or dissolve and cease operations? *If "Yes," complete Schedule N, Part I*	31		X
32	Did the organization sell, exchange, dispose of, or transfer more than 25% of its net assets? *If "Yes," complete Schedule N, Part II*	32		X
33	Did the organization own 100% of an entity disregarded as separate from the organization under Regulations sections 301.7701-2 and 301.7701-3? *If "Yes," complete Schedule R, Part I*	33		X
34	Was the organization related to any tax-exempt or taxable entity? *If "Yes," complete Schedule R, Part II, III, or IV, and Part V, line 1*	34		X
35a	Did the organization have a controlled entity within the meaning of section 512(b)(13)?	35a		X
b	If "Yes" to line 35a, did the organization receive any payment from or engage in any transaction with a controlled entity within the meaning of section 512(b)(13)? *If "Yes," complete Schedule R, Part V, line 2*	35b		
36	**Section 501(c)(3) organizations.** Did the organization make any transfers to an exempt non-charitable related organization? *If "Yes," complete Schedule R, Part V, line 2*	36		
37	Did the organization conduct more than 5% of its activities through an entity that is not a related organization and that is treated as a partnership for federal income tax purposes? *If "Yes," complete Schedule R, Part VI*	37		X
38	Did the organization complete Schedule O and provide explanations on Schedule O for Part VI, lines 11b and 19? **Note:** All Form 990 filers are required to complete Schedule O	38	X	

Part V Statements Regarding Other IRS Filings and Tax Compliance

Check if Schedule O contains a response or note to any line in this Part V ☐

				Yes	No
1a	Enter the number reported in box 3 of Form 1096. Enter -0- if not applicable	1a	0		
b	Enter the number of Forms W-2G included on line 1a. Enter -0- if not applicable	1b	0		
c	Did the organization comply with backup withholding rules for reportable payments to vendors and reportable gaming (gambling) winnings to prize winners?	1c			

Part V Statements Regarding Other IRS Filings and Tax Compliance *(continued)*

			Yes	No
2a	Enter the number of employees reported on Form W-3, Transmittal of Wage and Tax Statements, filed for the calendar year ending with or within the year covered by this return 2a 0			
b	If at least one is reported on line 2a, did the organization file all required federal employment tax returns?	2b		
	Note: If the sum of lines 1a and 2a is greater than 250, you may be required to *e-file.* See instructions.			
3a	Did the organization have unrelated business gross income of $1,000 or more during the year?	3a		X
b	If "Yes," has it filed a Form 990-T for this year? *If "No" to line 3b, provide an explanation on Schedule O*	3b		
4a	At any time during the calendar year, did the organization have an interest in, or a signature or other authority over, a financial account in a foreign country (such as a bank account, securities account, or other financial account)?	4a		X
b	If "Yes," enter the name of the foreign country ▶ See instructions for filing requirements for FinCEN Form 114, Report of Foreign Bank and Financial Accounts (FBAR).			
5a	Was the organization a party to a prohibited tax shelter transaction at any time during the tax year?	5a		X
b	Did any taxable party notify the organization that it was or is a party to a prohibited tax shelter transaction?	5b		X
c	If "Yes" to line 5a or 5b, did the organization file Form 8886-T?	5c		
6a	Does the organization have annual gross receipts that are normally greater than $100,000, and did the organization solicit any contributions that were not tax deductible as charitable contributions?	6a		X
b	If "Yes," did the organization include with every solicitation an express statement that such contributions or gifts were not tax deductible?	6b		
7	**Organizations that may receive deductible contributions under section 170(c).**			
a	Did the organization receive a payment in excess of $75 made partly as a contribution and partly for goods and services provided to the payor?	7a		X
b	If "Yes," did the organization notify the donor of the value of the goods or services provided?	7b		
c	Did the organization sell, exchange, or otherwise dispose of tangible personal property for which it was required to file Form 8282?	7c		X
d	If "Yes," indicate the number of Forms 8282 filed during the year 7d			
e	Did the organization receive any funds, directly or indirectly, to pay premiums on a personal benefit contract?	7e		
f	Did the organization, during the year, pay premiums, directly or indirectly, on a personal benefit contract?	7f		
g	If the organization received a contribution of qualified intellectual property, did the organization file Form 8899 as required?	7g		
h	If the organization received a contribution of cars, boats, airplanes, or other vehicles, did the organization file a Form 1098-C?	7h		
8	**Sponsoring organizations maintaining donor advised funds.** Did a donor advised fund maintained by the sponsoring organization have excess business holdings at any time during the year?	8		
9	**Sponsoring organizations maintaining donor advised funds.**			
a	Did the sponsoring organization make any taxable distributions under section 4966?	9a		
b	Did the sponsoring organization make a distribution to a donor, donor advisor, or related person?	9b		
10	**Section 501(c)(7) organizations.** Enter:			
a	Initiation fees and capital contributions included on Part VIII, line 12 10a			
b	Gross receipts, included on Form 990, Part VIII, line 12, for public use of club facilities 10b			
11	**Section 501(c)(12) organizations.** Enter:			
a	Gross income from members or shareholders 11a			
b	Gross income from other sources. (Do not net amounts due or paid to other sources against amounts due or received from them.) 11b			
12a	**Section 4947(a)(1) non-exempt charitable trusts.** Is the organization filing Form 990 in lieu of Form 1041?	12a		
b	If "Yes," enter the amount of tax-exempt interest received or accrued during the year 12b			
13	**Section 501(c)(29) qualified nonprofit health insurance issuers.**			
a	Is the organization licensed to issue qualified health plans in more than one state?	13a		
	Note: See the instructions for additional information the organization must report on Schedule O.			
b	Enter the amount of reserves the organization is required to maintain by the states in which the organization is licensed to issue qualified health plans 13b			
c	Enter the amount of reserves on hand 13c			
14a	Did the organization receive any payments for indoor tanning services during the tax year?	14a		X
b	If "Yes," has it filed a Form 720 to report these payments? *If "No," provide an explanation on Schedule O*	14b		
15	Is the organization subject to the section 4960 tax on payment(s) of more than $1,000,000 in remuneration or excess parachute payment(s) during the year? If "Yes," see the instructions and file Form 4720, Schedule N.	15		X
16	Is the organization an educational institution subject to the section 4968 excise tax on net investment income? If "Yes," complete Form 4720, Schedule O.	16		X
17	**Section 501(c)(21) organizations.** Did the trust, any disqualified person, or mine operator engage in any activities that would result in the imposition of an excise tax under section 4951, 4952 or 4953? If "Yes," complete Form 6069.	17		

Part VI Governance, Management, and Disclosure. *For each "Yes" response to lines 2 through 7b below, and for a "No" response to line 8a, 8b, or 10b below, describe the circumstances, processes, or changes on Schedule O. See instructions.*

Check if Schedule O contains a response or note to any line in this Part VI X

Section A. Governing Body and Management

				Yes	No
1a	Enter the number of voting members of the governing body at the end of the tax year	1a	7		
	If there are material differences in voting rights among members of the governing body, or if the governing body delegated broad authority to an executive committee or similar committee, explain on Schedule O.				
b	Enter the number of voting members included on line 1a, above, who are independent	1b	7		
2	Did any officer, director, trustee, or key employee have a family relationship or a business relationship with any other officer, director, trustee, or key employee?	2			X
3	Did the organization delegate control over management duties customarily performed by or under the direct supervision of officers, directors, trustees, or key employees to a management company or other person?	3			X
4	Did the organization make any significant changes to its governing documents since the prior Form 990 was filed?	4			X
5	Did the organization become aware during the year of a significant diversion of the organization's assets?	5			X
6	Did the organization have members or stockholders?	6			X
7a	Did the organization have members, stockholders, or other persons who had the power to elect or appoint one or more members of the governing body?	7a			X
b	Are any governance decisions of the organization reserved to (or subject to approval by) members, stockholders, or persons other than the governing body?	7b			X
8	Did the organization contemporaneously document the meetings held or written actions undertaken during the year by the following:				
a	The governing body?	8a		X	
b	Each committee with authority to act on behalf of the governing body?	8b		X	
9	Is there any officer, director, trustee, or key employee listed in Part VII, Section A, who cannot be reached at the organization's mailing address? *If "Yes," provide the names and addresses on Schedule O*	9			X

Section B. Policies *(This Section B requests information about policies not required by the Internal Revenue Code.)*

			Yes	No
10a	Did the organization have local chapters, branches, or affiliates?	10a		X
b	If "Yes," did the organization have written policies and procedures governing the activities of such chapters, affiliates, and branches to ensure their operations are consistent with the organization's exempt purposes?	10b		
11a	Has the organization provided a complete copy of this Form 990 to all members of its governing body before filing the form?	11a	X	
b	Describe on Schedule O the process, if any, used by the organization to review this Form 990.			
12a	Did the organization have a written conflict of interest policy? *If "No," go to line 13*	12a		X
b	Were officers, directors, or trustees, and key employees required to disclose annually interests that could give rise to conflicts?	12b		
c	Did the organization regularly and consistently monitor and enforce compliance with the policy? *If "Yes," describe on Schedule O how this was done*	12c		
13	Did the organization have a written whistleblower policy?	13		X
14	Did the organization have a written document retention and destruction policy?	14		X
15	Did the process for determining compensation of the following persons include a review and approval by independent persons, comparability data, and contemporaneous substantiation of the deliberation and decision?			
a	The organization's CEO, Executive Director, or top management official	15a		X
b	Other officers or key employees of the organization	15b		X
	If "Yes" to line 15a or 15b, describe the process on Schedule O. See instructions.			
16a	Did the organization invest in, contribute assets to, or participate in a joint venture or similar arrangement with a taxable entity during the year?	16a		X
b	If "Yes," did the organization follow a written policy or procedure requiring the organization to evaluate its participation in joint venture arrangements under applicable federal tax law, and take steps to safeguard the organization's exempt status with respect to such arrangements?	16b		

Section C. Disclosure

17 List the states with which a copy of this Form 990 is required to be filed ▶ WV

18 Section 6104 requires an organization to make its Forms 1023 (1024 or 1024-A, if applicable), 990, and 990-T (section 501(c)(3)s only) available for public inspection. Indicate how you made these available. Check all that apply.

☐ Own website ☐ Another's website ☒ Upon request ☐ Other *(explain on Schedule O)*

19 Describe on Schedule O whether (and if so, how) the organization made its governing documents, conflict of interest policy, and financial statements available to the public during the tax year.

20 State the name, address, and telephone number of the person who possesses the organization's books and records ▶

RANDAL E. NUZUM - 304.592.1851

37 BRIDGE STREET, SHINNSTON, WV 26431-1401

Part VII Compensation of Officers, Directors, Trustees, Key Employees, Highest Compensated Employees, and Independent Contractors

Check if Schedule O contains a response or note to any line in this Part VII ☐

Section A. Officers, Directors, Trustees, Key Employees, and Highest Compensated Employees

1a Complete this table for all persons required to be listed. Report compensation for the calendar year ending with or within the organization's tax year.

- List all of the organization's **current** officers, directors, trustees (whether individuals or organizations), regardless of amount of compensation. Enter -0- in columns (D), (E), and (F) if no compensation was paid.
- List all of the organization's **current** key employees, if any. See the instructions for definition of "key employee."
- List the organization's five **current** highest compensated employees (other than an officer, director, trustee, or key employee) who received reportable compensation (box 5 of Form W-2, Form 1099-MISC, and/or box 1 of Form 1099-NEC) of more than $100,000 from the organization and any related organizations.
- List all of the organization's **former** officers, key employees, and highest compensated employees who received more than $100,000 of reportable compensation from the organization and any related organizations.
- List all of the organization's **former directors or trustees** that received, in the capacity as a former director or trustee of the organization, more than $10,000 of reportable compensation from the organization and any related organizations.

See the instructions for the order in which to list the persons above.

☒ Check this box if neither the organization nor any related organization compensated any current officer, director, or trustee.

(A) Name and title	(B) Average hours per week (list any hours for related organizations below line)	(C) Position (do not check more than one box, unless person is both an officer and a director/trustee)						(D) Reportable compensation from the organization (W-2/1099-MISC/ 1099-NEC)	(E) Reportable compensation from related organizations (W-2/1099-MISC/ 1099-NEC)	(F) Estimated amount of other compensation from the organization and related organizations
		Individual trustee or director	Institutional trustee	Officer	Key employee	Highest compensated employee	Former			
(1) CHUCK BLAKE PRESIDENT	10.00			X				0.	0.	0.
(2) DUSTIN SMITH VICE PRESIDENT	8.00			X				0.	0.	0.
(3) JASON DRAIN SECRETARY	8.00			X				0.	0.	0.
(4) RANDAL E. NUZUM TREASURER	12.00			X				0.	0.	0.
(5) DYLAN OLIVETO BOARD MEMBER	2.00	X						0.	0.	0.
(6) MARK JEFFRIES BOARD MEMBER	2.00	X						0.	0.	0.
(7) RANDY AKERS BOARD MEMBER	2.00	X						0.	0.	0.

Part VII Section A. Officers, Directors, Trustees, Key Employees, and Highest Compensated Employees *(continued)*

(A) Name and title	(B) Average hours per week (list any hours for related organizations below line)	(C) Position (do not check more than one box, unless person is both an officer and a director/trustee)						(D) Reportable compensation from the organization (W-2/1099-MISC/ 1099-NEC)	(E) Reportable compensation from related organizations (W-2/1099-MISC/ 1099-NEC)	(F) Estimated amount of other compensation from the organization and related organizations
		Individual trustee or director	Institutional trustee	Officer	Key employee	Highest compensated employee	Former			
1b Subtotal ▶								0.	0.	0.
c Total from continuation sheets to Part VII, Section A ▶								0.	0.	0.
d Total (add lines 1b and 1c) ▶								0.	0.	0.

2 Total number of individuals (including but not limited to those listed above) who received more than $100,000 of reportable compensation from the organization ▶ 0

		Yes	No
3 Did the organization list any **former** officer, director, trustee, key employee, or highest compensated employee on line 1a? *If "Yes," complete Schedule J for such individual*	3		X
4 For any individual listed on line 1a, is the sum of reportable compensation and other compensation from the organization and related organizations greater than $150,000? *If "Yes," complete Schedule J for such individual*	4		X
5 Did any person listed on line 1a receive or accrue compensation from any unrelated organization or individual for services rendered to the organization? *If "Yes," complete Schedule J for such person*	5		X

Section B. Independent Contractors

1 Complete this table for your five highest compensated independent contractors that received more than $100,000 of compensation from the organization. Report compensation for the calendar year ending with or within the organization's tax year.

(A) Name and business address	(B) Description of services	(C) Compensation
NONE		

2 Total number of independent contractors (including but not limited to those listed above) who received more than $100,000 of compensation from the organization ▶ 0

Part VIII Statement of Revenue

Check if Schedule O contains a response or note to any line in this Part VIII ☐

			(A) Total revenue	(B) Related or exempt function revenue	(C) Unrelated business revenue	(D) Revenue excluded from tax under sections 512 - 514
Contributions, Gifts, Grants and Other Similar Amounts	1a Federated campaigns	1a				
	b Membership dues	1b				
	c Fundraising events	1c				
	d Related organizations	1d				
	e Government grants (contributions)	1e	54,574.			
	f All other contributions, gifts, grants, and similar amounts not included above	1f	51,011.			
	g Noncash contributions included in lines 1a-1f	1g	$			
	h **Total.** Add lines 1a-1f		105,585.			
Program Service Revenue		**Business Code**				
	2a OTHER INCOME	900099	214,625.	212,616.	2,009.	
	b					
	c					
	d					
	e					
	f All other program service revenue					
	g **Total.** Add lines 2a-2f		214,625.			
Other Revenue	3 Investment income (including dividends, interest, and other similar amounts)		85.	85.		
	4 Income from investment of tax-exempt bond proceeds					
	5 Royalties		2,344.	2,344.		
		(i) Real	(ii) Personal			
	6a Gross rents 6a					
	b Less: rental expenses 6b					
	c Rental income or (loss) 6c					
	d Net rental income or (loss)					
		(i) Securities	(ii) Other			
	7a Gross amount from sales of assets other than inventory 7a					
	b Less: cost or other basis and sales expenses 7b					
	c Gain or (loss) 7c					
	d Net gain or (loss)					
	8a Gross income from fundraising events (not including $ _____ of contributions reported on line 1c). See Part IV, line 18 8a					
	b Less: direct expenses 8b					
	c Net income or (loss) from fundraising events					
	9a Gross income from gaming activities. See Part IV, line 19 9a					
	b Less: direct expenses 9b					
	c Net income or (loss) from gaming activities					
	10a Gross sales of inventory, less returns and allowances 10a					
	b Less: cost of goods sold 10b					
	c Net income or (loss) from sales of inventory					
Miscellaneous Revenue		**Business Code**				
	11a					
	b					
	c					
	d All other revenue					
	e **Total.** Add lines 11a-11d					
	12 **Total revenue.** See instructions		322,639.	215,045.	2,009.	0.

Part IX Statement of Functional Expenses

Section 501(c)(3) and 501(c)(4) organizations must complete all columns. All other organizations must complete column (A).

Check if Schedule O contains a response or note to any line in this Part IX ☐

Do not include amounts reported on lines 6b, 7b, 8b, 9b, and 10b of Part VIII.	(A) Total expenses	(B) Program service expenses	(C) Management and general expenses	(D) Fundraising expenses
1 Grants and other assistance to domestic organizations and domestic governments. See Part IV, line 21				
2 Grants and other assistance to domestic individuals. See Part IV, line 22				
3 Grants and other assistance to foreign organizations, foreign governments, and foreign individuals. See Part IV, lines 15 and 16				
4 Benefits paid to or for members				
5 Compensation of current officers, directors, trustees, and key employees				
6 Compensation not included above to disqualified persons (as defined under section 4958(f)(1)) and persons described in section 4958(c)(3)(B)				
7 Other salaries and wages				
8 Pension plan accruals and contributions (include section 401(k) and 403(b) employer contributions)				
9 Other employee benefits				
10 Payroll taxes				
11 Fees for services (nonemployees):				
a Management				
b Legal	398.	398.		
c Accounting	2,550.	2,550.		
d Lobbying				
e Professional fundraising services. See Part IV, line 17				
f Investment management fees				
g Other. (If line 11g amount exceeds 10% of line 25, column (A), amount, list line 11g expenses on Sch O.)				
12 Advertising and promotion				
13 Office expenses	1,810.	1,810.		
14 Information technology	325.	325.		
15 Royalties				
16 Occupancy	35,495.	35,495.		
17 Travel				
18 Payments of travel or entertainment expenses for any federal, state, or local public officials				
19 Conferences, conventions, and meetings				
20 Interest	3,872.	3,872.		
21 Payments to affiliates				
22 Depreciation, depletion, and amortization	49,445.	49,445.		
23 Insurance	25,237.	25,237.		
24 Other expenses. Itemize expenses not covered above. (List miscellaneous expenses on line 24e. If line 24e amount exceeds 10% of line 25, column (A), amount, list line 24e expenses on Schedule O.)				
a VEHICLE MAINTENANCE	68,282.	68,282.		
b FIREFIGHTER GEAR	37,941.	37,941.		
c EQUIPMENT MAINTENANCE &	9,548.	9,548.		
d TRAINING	8,777.	8,777.		
e All other expenses	595.	595.		
25 **Total functional expenses.** Add lines 1 through 24e	244,275.	244,275.	0.	0.
26 **Joint costs.** Complete this line only if the organization reported in column (B) joint costs from a combined educational campaign and fundraising solicitation. Check here ▶ ☐ if following SOP 98-2 (ASC 958-720)				

Part X Balance Sheet

Check if Schedule O contains a response or note to any line in this Part X ☐

			(A) Beginning of year		(B) End of year
Assets	1	Cash - non-interest-bearing		1	
	2	Savings and temporary cash investments	204,534.	2	178,791.
	3	Pledges and grants receivable, net		3	
	4	Accounts receivable, net		4	
	5	Loans and other receivables from any current or former officer, director, trustee, key employee, creator or founder, substantial contributor, or 35% controlled entity or family member of any of these persons		5	
	6	Loans and other receivables from other disqualified persons (as defined under section 4958(f)(1)), and persons described in section 4958(c)(3)(B)		6	
	7	Notes and loans receivable, net		7	
	8	Inventories for sale or use		8	
	9	Prepaid expenses and deferred charges		9	
	10a	Land, buildings, and equipment: cost or other basis. Complete Part VI of Schedule D — 10a: 2,117,189.			
	b	Less: accumulated depreciation — 10b: 1,607,427.	454,560.	10c	509,762.
	11	Investments - publicly traded securities		11	
	12	Investments - other securities. See Part IV, line 11		12	
	13	Investments - program-related. See Part IV, line 11		13	
	14	Intangible assets		14	
	15	Other assets. See Part IV, line 11		15	
	16	**Total assets.** Add lines 1 through 15 (must equal line 33)	659,094.	16	688,553.
Liabilities	17	Accounts payable and accrued expenses		17	
	18	Grants payable		18	
	19	Deferred revenue		19	
	20	Tax-exempt bond liabilities		20	
	21	Escrow or custodial account liability. Complete Part IV of Schedule D		21	
	22	Loans and other payables to any current or former officer, director, trustee, key employee, creator or founder, substantial contributor, or 35% controlled entity or family member of any of these persons		22	
	23	Secured mortgages and notes payable to unrelated third parties	285,037.	23	236,132.
	24	Unsecured notes and loans payable to unrelated third parties		24	
	25	Other liabilities (including federal income tax, payables to related third parties, and other liabilities not included on lines 17-24). Complete Part X of Schedule D		25	
	26	**Total liabilities.** Add lines 17 through 25	285,037.	26	236,132.
Net Assets or Fund Balances		**Organizations that follow FASB ASC 958, check here ▶ ☒ and complete lines 27, 28, 32, and 33.**			
	27	Net assets without donor restrictions	374,057.	27	452,421.
	28	Net assets with donor restrictions		28	
		Organizations that do not follow FASB ASC 958, check here ▶ ☐ and complete lines 29 through 33.			
	29	Capital stock or trust principal, or current funds		29	
	30	Paid-in or capital surplus, or land, building, or equipment fund		30	
	31	Retained earnings, endowment, accumulated income, or other funds		31	
	32	Total net assets or fund balances	374,057.	32	452,421.
	33	Total liabilities and net assets/fund balances	659,094.	33	688,553.

Part XI Reconciliation of Net Assets

Check if Schedule O contains a response or note to any line in this Part XI ☐

1	Total revenue (must equal Part VIII, column (A), line 12)	1	322,639.
2	Total expenses (must equal Part IX, column (A), line 25)	2	244,275.
3	Revenue less expenses. Subtract line 2 from line 1	3	78,364.
4	Net assets or fund balances at beginning of year (must equal Part X, line 32, column (A))	4	374,057.
5	Net unrealized gains (losses) on investments	5	
6	Donated services and use of facilities	6	
7	Investment expenses	7	
8	Prior period adjustments	8	
9	Other changes in net assets or fund balances (explain on Schedule O)	9	0.
10	Net assets or fund balances at end of year. Combine lines 3 through 9 (must equal Part X, line 32, column (B))	10	452,421.

Part XII Financial Statements and Reporting

Check if Schedule O contains a response or note to any line in this Part XII ☐

			Yes	No
1	Accounting method used to prepare the Form 990: ☒ Cash ☐ Accrual ☐ Other _____ If the organization changed its method of accounting from a prior year or checked "Other," explain on Schedule O.			
2a	Were the organization's financial statements compiled or reviewed by an independent accountant? If "Yes," check a box below to indicate whether the financial statements for the year were compiled or reviewed on a separate basis, consolidated basis, or both: ☐ Separate basis ☐ Consolidated basis ☐ Both consolidated and separate basis	2a		X
b	Were the organization's financial statements audited by an independent accountant? If "Yes," check a box below to indicate whether the financial statements for the year were audited on a separate basis, consolidated basis, or both: ☐ Separate basis ☐ Consolidated basis ☐ Both consolidated and separate basis	2b		X
c	If "Yes" to line 2a or 2b, does the organization have a committee that assumes responsibility for oversight of the audit, review, or compilation of its financial statements and selection of an independent accountant? If the organization changed either its oversight process or selection process during the tax year, explain on Schedule O.	2c		
3a	As a result of a federal award, was the organization required to undergo an audit or audits as set forth in the Single Audit Act and OMB Circular A-133?	3a		X
b	If "Yes," did the organization undergo the required audit or audits? If the organization did not undergo the required audit or audits, explain why on Schedule O and describe any steps taken to undergo such audits	3b		

SCHEDULE A (Form 990)

Department of the Treasury
Internal Revenue Service

Public Charity Status and Public Support

Complete if the organization is a section 501(c)(3) organization or a section 4947(a)(1) nonexempt charitable trust.

▶ **Attach to Form 990 or Form 990-EZ.**

▶ **Go to www.irs.gov/Form990 for instructions and the latest information.**

OMB No. 1545-0047

2021

Open to Public Inspection

Name of the organization

SHINNSTON VOLUNTEER FIRE DEPARTMENT

Employer identification number

Part I Reason for Public Charity Status. (All organizations must complete this part.) See instructions.

The organization is not a private foundation because it is: (For lines 1 through 12, check only one box.)

1 ☐ A church, convention of churches, or association of churches described in **section 170(b)(1)(A)(i).**

2 ☐ A school described in **section 170(b)(1)(A)(ii).** (Attach Schedule E (Form 990).)

3 ☐ A hospital or a cooperative hospital service organization described in **section 170(b)(1)(A)(iii).**

4 ☐ A medical research organization operated in conjunction with a hospital described in **section 170(b)(1)(A)(iii).** Enter the hospital's name, city, and state: _____

5 ☐ An organization operated for the benefit of a college or university owned or operated by a governmental unit described in **section 170(b)(1)(A)(iv).** (Complete Part II.)

6 ☐ A federal, state, or local government or governmental unit described in **section 170(b)(1)(A)(v).**

7 ☐ An organization that normally receives a substantial part of its support from a governmental unit or from the general public described in **section 170(b)(1)(A)(vi).** (Complete Part II.)

8 ☐ A community trust described in **section 170(b)(1)(A)(vi).** (Complete Part II.)

9 ☐ An agricultural research organization described in **section 170(b)(1)(A)(ix)** operated in conjunction with a land-grant college or university or a non-land-grant college of agriculture (see instructions). Enter the name, city, and state of the college or university: _____

10 ☐ An organization that normally receives (1) more than 33 1/3% of its support from contributions, membership fees, and gross receipts from activities related to its exempt functions, subject to certain exceptions; and (2) no more than 33 1/3% of its support from gross investment income and unrelated business taxable income (less section 511 tax) from businesses acquired by the organization after June 30, 1975. See **section 509(a)(2).** (Complete Part III.)

11 ☒ An organization organized and operated exclusively to test for public safety. See **section 509(a)(4).**

12 ☐ An organization organized and operated exclusively for the benefit of, to perform the functions of, or to carry out the purposes of one or more publicly supported organizations described in **section 509(a)(1)** or **section 509(a)(2).** See **section 509(a)(3).** Check the box on lines 12a through 12d that describes the type of supporting organization and complete lines 12e, 12f, and 12g.

a ☐ **Type I.** A supporting organization operated, supervised, or controlled by its supported organization(s), typically by giving the supported organization(s) the power to regularly appoint or elect a majority of the directors or trustees of the supporting organization. **You must complete Part IV, Sections A and B.**

b ☐ **Type II.** A supporting organization supervised or controlled in connection with its supported organization(s), by having control or management of the supporting organization vested in the same persons that control or manage the supported organization(s). **You must complete Part IV, Sections A and C.**

c ☐ **Type III functionally integrated.** A supporting organization operated in connection with, and functionally integrated with, its supported organization(s) (see instructions). **You must complete Part IV, Sections A, D, and E.**

d ☐ **Type III non-functionally integrated.** A supporting organization operated in connection with its supported organization(s) that is not functionally integrated. The organization generally must satisfy a distribution requirement and an attentiveness requirement (see instructions). **You must complete Part IV, Sections A and D, and Part V.**

e ☐ Check this box if the organization received a written determination from the IRS that it is a Type I, Type II, Type III functionally integrated, or Type III non-functionally integrated supporting organization.

f Enter the number of supported organizations .....

g Provide the following information about the supported organization(s).

(i) Name of supported organization	(ii) EIN	(iii) Type of organization (described on lines 1-10 above (see instructions))	(iv) Is the organization listed in your governing document? Yes	(iv) No	(v) Amount of monetary support (see instructions)	(vi) Amount of other support (see instructions)
Total						

Part II **Support Schedule for Organizations Described in Sections 170(b)(1)(A)(iv) and 170(b)(1)(A)(vi)**

(Complete only if you checked the box on line 5, 7, or 8 of Part I or if the organization failed to qualify under Part III. If the organization fails to qualify under the tests listed below, please complete Part III.)

Section A. Public Support

Calendar year (or fiscal year beginning in) ▶	(a) 2017	(b) 2018	(c) 2019	(d) 2020	(e) 2021	(f) Total
1 Gifts, grants, contributions, and membership fees received. (Do not include any "unusual grants.")						
2 Tax revenues levied for the organization's benefit and either paid to or expended on its behalf						
3 The value of services or facilities furnished by a governmental unit to the organization without charge						
4 **Total.** Add lines 1 through 3						
5 The portion of total contributions by each person (other than a governmental unit or publicly supported organization) included on line 1 that exceeds 2% of the amount shown on line 11, column (f)						
6 **Public support.** Subtract line 5 from line 4.						

Section B. Total Support

Calendar year (or fiscal year beginning in) ▶	(a) 2017	(b) 2018	(c) 2019	(d) 2020	(e) 2021	(f) Total
7 Amounts from line 4						
8 Gross income from interest, dividends, payments received on securities loans, rents, royalties, and income from similar sources						
9 Net income from unrelated business activities, whether or not the business is regularly carried on						
10 Other income. Do not include gain or loss from the sale of capital assets (Explain in Part VI.)						
11 **Total support.** Add lines 7 through 10						

12 Gross receipts from related activities, etc. (see instructions) 12

13 **First 5 years.** If the Form 990 is for the organization's first, second, third, fourth, or fifth tax year as a section 501(c)(3) organization, check this box and **stop here** ..... ▶ ☐

Section C. Computation of Public Support Percentage

14 Public support percentage for 2021 (line 6, column (f), divided by line 11, column (f)) ..... 14 %

15 Public support percentage from 2020 Schedule A, Part II, line 14 ..... 15 %

16a **33 1/3% support test - 2021.** If the organization did not check the box on line 13, and line 14 is 33 1/3% or more, check this box and **stop here.** The organization qualifies as a publicly supported organization ..... ▶ ☐

b **33 1/3% support test - 2020.** If the organization did not check a box on line 13 or 16a, and line 15 is 33 1/3% or more, check this box and **stop here.** The organization qualifies as a publicly supported organization ..... ▶ ☐

17a **10% -facts-and-circumstances test - 2021.** If the organization did not check a box on line 13, 16a, or 16b, and line 14 is 10% or more, and if the organization meets the facts-and-circumstances test, check this box and **stop here.** Explain in Part VI how the organization meets the facts-and-circumstances test. The organization qualifies as a publicly supported organization ..... ▶ ☐

b **10% -facts-and-circumstances test - 2020.** If the organization did not check a box on line 13, 16a, 16b, or 17a, and line 15 is 10% or more, and if the organization meets the facts-and-circumstances test, check this box and **stop here.** Explain in Part VI how the organization meets the facts-and-circumstances test. The organization qualifies as a publicly supported organization ..... ▶ ☐

18 **Private foundation.** If the organization did not check a box on line 13, 16a, 16b, 17a, or 17b, check this box and see instructions ..... ▶ ☐

Part III Support Schedule for Organizations Described in Section 509(a)(2)

(Complete only if you checked the box on line 10 of Part I or if the organization failed to qualify under Part II. If the organization fails to qualify under the tests listed below, please complete Part II.)

Section A. Public Support

Calendar year (or fiscal year beginning in) ▶	(a) 2017	(b) 2018	(c) 2019	(d) 2020	(e) 2021	(f) Total
1 Gifts, grants, contributions, and membership fees received. (Do not include any "unusual grants.")						
2 Gross receipts from admissions, merchandise sold or services performed, or facilities furnished in any activity that is related to the organization's tax-exempt purpose						
3 Gross receipts from activities that are not an unrelated trade or business under section 513						
4 Tax revenues levied for the organization's benefit and either paid to or expended on its behalf						
5 The value of services or facilities furnished by a governmental unit to the organization without charge						
6 **Total.** Add lines 1 through 5						
7a Amounts included on lines 1, 2, and 3 received from disqualified persons						
b Amounts included on lines 2 and 3 received from other than disqualified persons that exceed the greater of $5,000 or 1% of the amount on line 13 for the year						
c Add lines 7a and 7b						
8 **Public support.** (Subtract line 7c from line 6.)						

Section B. Total Support

Calendar year (or fiscal year beginning in) ▶	(a) 2017	(b) 2018	(c) 2019	(d) 2020	(e) 2021	(f) Total
9 Amounts from line 6						
10a Gross income from interest, dividends, payments received on securities loans, rents, royalties, and income from similar sources						
b Unrelated business taxable income (less section 511 taxes) from businesses acquired after June 30, 1975						
c Add lines 10a and 10b						
11 Net income from unrelated business activities not included on line 10b, whether or not the business is regularly carried on						
12 Other income. Do not include gain or loss from the sale of capital assets (Explain in Part VI.)						
13 **Total support.** (Add lines 9, 10c, 11, and 12.)						

14 **First 5 years.** If the Form 990 is for the organization's first, second, third, fourth, or fifth tax year as a section 501(c)(3) organization, check this box and **stop here** ▶ ☐

Section C. Computation of Public Support Percentage

15 Public support percentage for 2021 (line 8, column (f), divided by line 13, column (f))	15	%
16 Public support percentage from 2020 Schedule A, Part III, line 15	16	%

Section D. Computation of Investment Income Percentage

17 Investment income percentage for **2021** (line 10c, column (f), divided by line 13, column (f))	17	%
18 Investment income percentage from **2020** Schedule A, Part III, line 17	18	%

19a **33 1/3% support tests - 2021.** If the organization did not check the box on line 14, and line 15 is more than 33 1/3%, and line 17 is not more than 33 1/3%, check this box and **stop here.** The organization qualifies as a publicly supported organization ▶ ☐

b **33 1/3% support tests - 2020.** If the organization did not check a box on line 14 or line 19a, and line 16 is more than 33 1/3%, and line 18 is not more than 33 1/3%, check this box and **stop here.** The organization qualifies as a publicly supported organization ▶ ☐

20 **Private foundation.** If the organization did not check a box on line 14, 19a, or 19b, check this box and see instructions ▶ ☐

Part IV Supporting Organizations

(Complete only if you checked a box in line 12 on Part I. If you checked box 12a, Part I, complete Sections A and B. If you checked box 12b, Part I, complete Sections A and C. If you checked box 12c, Part I, complete Sections A, D, and E. If you checked box 12d, Part I, complete Sections A and D, and complete Part V.)

Section A. All Supporting Organizations

			Yes	No
1	Are all of the organization's supported organizations listed by name in the organization's governing documents? *If "No," describe in* **Part VI** *how the supported organizations are designated. If designated by class or purpose, describe the designation. If historic and continuing relationship, explain.*	1		
2	Did the organization have any supported organization that does not have an IRS determination of status under section 509(a)(1) or (2)? *If "Yes," explain in* **Part VI** *how the organization determined that the supported organization was described in section 509(a)(1) or (2).*	2		
3a	Did the organization have a supported organization described in section 501(c)(4), (5), or (6)? *If "Yes," answer lines 3b and 3c below.*	3a		
b	Did the organization confirm that each supported organization qualified under section 501(c)(4), (5), or (6) and satisfied the public support tests under section 509(a)(2)? *If "Yes," describe in* **Part VI** *when and how the organization made the determination.*	3b		
c	Did the organization ensure that all support to such organizations was used exclusively for section 170(c)(2)(B) purposes? *If "Yes," explain in* **Part VI** *what controls the organization put in place to ensure such use.*	3c		
4a	Was any supported organization not organized in the United States ("foreign supported organization")? *If "Yes," and if you checked box 12a or 12b in Part I, answer lines 4b and 4c below.*	4a		
b	Did the organization have ultimate control and discretion in deciding whether to make grants to the foreign supported organization? *If "Yes," describe in* **Part VI** *how the organization had such control and discretion despite being controlled or supervised by or in connection with its supported organizations.*	4b		
c	Did the organization support any foreign supported organization that does not have an IRS determination under sections 501(c)(3) and 509(a)(1) or (2)? *If "Yes," explain in* **Part VI** *what controls the organization used to ensure that all support to the foreign supported organization was used exclusively for section 170(c)(2)(B) purposes.*	4c		
5a	Did the organization add, substitute, or remove any supported organizations during the tax year? *If "Yes," answer lines 5b and 5c below (if applicable). Also, provide detail in* **Part VI,** *including (i) the names and EIN numbers of the supported organizations added, substituted, or removed; (ii) the reasons for each such action; (iii) the authority under the organization's organizing document authorizing such action; and (iv) how the action was accomplished (such as by amendment to the organizing document).*	5a		
b	**Type I or Type II only.** Was any added or substituted supported organization part of a class already designated in the organization's organizing document?	5b		
c	**Substitutions only.** Was the substitution the result of an event beyond the organization's control?	5c		
6	Did the organization provide support (whether in the form of grants or the provision of services or facilities) to anyone other than (i) its supported organizations, (ii) individuals that are part of the charitable class benefited by one or more of its supported organizations, or (iii) other supporting organizations that also support or benefit one or more of the filing organization's supported organizations? *If "Yes," provide detail in* **Part VI.**	6		
7	Did the organization provide a grant, loan, compensation, or other similar payment to a substantial contributor (as defined in section 4958(c)(3)(C)), a family member of a substantial contributor, or a 35% controlled entity with regard to a substantial contributor? *If "Yes," complete Part I of Schedule L (Form 990).*	7		
8	Did the organization make a loan to a disqualified person (as defined in section 4958) not described on line 7? *If "Yes," complete Part I of Schedule L (Form 990).*	8		
9a	Was the organization controlled directly or indirectly at any time during the tax year by one or more disqualified persons, as defined in section 4946 (other than foundation managers and organizations described in section 509(a)(1) or (2))? *If "Yes," provide detail in* **Part VI.**	9a		
b	Did one or more disqualified persons (as defined on line 9a) hold a controlling interest in any entity in which the supporting organization had an interest? *If "Yes," provide detail in* **Part VI.**	9b		
c	Did a disqualified person (as defined on line 9a) have an ownership interest in, or derive any personal benefit from, assets in which the supporting organization also had an interest? *If "Yes," provide detail in* **Part VI.**	9c		
10a	Was the organization subject to the excess business holdings rules of section 4943 because of section 4943(f) (regarding certain Type II supporting organizations, and all Type III non-functionally integrated supporting organizations)? *If "Yes," answer line 10b below.*	10a		
b	Did the organization have any excess business holdings in the tax year? *(Use Schedule C, Form 4720, to determine whether the organization had excess business holdings.)*	10b		

Part IV Supporting Organizations *(continued)*

		Yes	No
11	Has the organization accepted a gift or contribution from any of the following persons?		
a	A person who directly or indirectly controls, either alone or together with persons described on lines 11b and 11c below, the governing body of a supported organization?	11a	
b	A family member of a person described on line 11a above?	11b	
c	A 35% controlled entity of a person described on line 11a or 11b above? *If "Yes" to line 11a, 11b, or 11c, provide detail in* **Part VI.**	11c	

Section B. Type I Supporting Organizations

		Yes	No
1	Did the governing body, members of the governing body, officers acting in their official capacity, or membership of one or more supported organizations have the power to regularly appoint or elect at least a majority of the organization's officers, directors, or trustees at all times during the tax year? *If "No," describe in* **Part VI** *how the supported organization(s) effectively operated, supervised, or controlled the organization's activities. If the organization had more than one supported organization, describe how the powers to appoint and/or remove officers, directors, or trustees were allocated among the supported organizations and what conditions or restrictions, if any, applied to such powers during the tax year.*	1	
2	Did the organization operate for the benefit of any supported organization other than the supported organization(s) that operated, supervised, or controlled the supporting organization? *If "Yes," explain in* **Part VI** *how providing such benefit carried out the purposes of the supported organization(s) that operated, supervised, or controlled the supporting organization.*	2	

Section C. Type II Supporting Organizations

		Yes	No
1	Were a majority of the organization's directors or trustees during the tax year also a majority of the directors or trustees of each of the organization's supported organization(s)? *If "No," describe in* **Part VI** *how control or management of the supporting organization was vested in the same persons that controlled or managed the supported organization(s).*	1	

Section D. All Type III Supporting Organizations

		Yes	No
1	Did the organization provide to each of its supported organizations, by the last day of the fifth month of the organization's tax year, (i) a written notice describing the type and amount of support provided during the prior tax year, (ii) a copy of the Form 990 that was most recently filed as of the date of notification, and (iii) copies of the organization's governing documents in effect on the date of notification, to the extent not previously provided?	1	
2	Were any of the organization's officers, directors, or trustees either (i) appointed or elected by the supported organization(s) or (ii) serving on the governing body of a supported organization? *If "No," explain in* **Part VI** *how the organization maintained a close and continuous working relationship with the supported organization(s).*	2	
3	By reason of the relationship described on line 2, above, did the organization's supported organizations have a significant voice in the organization's investment policies and in directing the use of the organization's income or assets at all times during the tax year? *If "Yes," describe in* **Part VI** *the role the organization's supported organizations played in this regard.*	3	

Section E. Type III Functionally Integrated Supporting Organizations

1 *Check the box next to the method that the organization used to satisfy the Integral Part Test during the yea* **(see instructions).**

a ☐ The organization satisfied the Activities Test. *Complete* **line 2** *below.*

b ☐ The organization is the parent of each of its supported organizations. *Complete* **line 3** *below.*

c ☐ The organization supported a governmental entity. *Describe in* **Part VI** *how you supported a governmental entity (see instructions).*

		Yes	No
2	Activities Test. **Answer lines 2a and 2b below.**		
a	Did substantially all of the organization's activities during the tax year directly further the exempt purposes of the supported organization(s) to which the organization was responsive? *If "Yes," then in* **Part VI identify those supported organizations and explain** *how these activities directly furthered their exempt purposes, how the organization was responsive to those supported organizations, and how the organization determined that these activities constituted substantially all of its activities.*	2a	
b	Did the activities described on line 2a, above, constitute activities that, but for the organization's involvement, one or more of the organization's supported organization(s) would have been engaged in? *If "Yes," explain in* **Part VI** *the reasons for the organization's position that its supported organization(s) would have engaged in these activities but for the organization's involvement.*	2b	
3	Parent of Supported Organizations. **Answer lines 3a and 3b below.**		
a	Did the organization have the power to regularly appoint or elect a majority of the officers, directors, or trustees of each of the supported organizations? *If "Yes" or "No" provide details in* **Part VI.**	3a	
b	Did the organization exercise a substantial degree of direction over the policies, programs, and activities of each of its supported organizations? *If "Yes," describe in* **Part VI** *the role played by the organization in this regard.*	3b	

Part V Type III Non-Functionally Integrated 509(a)(3) Supporting Organizations

1 ☐ Check here if the organization satisfied the Integral Part Test as a qualifying trust on Nov. 20, 1970 (*explain in* **Part VI**). **See instructions.** All other Type III non-functionally integrated supporting organizations must complete Sections A through E.

Section A - Adjusted Net Income		(A) Prior Year	(B) Current Year (optional)
1 Net short-term capital gain	1		
2 Recoveries of prior-year distributions	2		
3 Other gross income (see instructions)	3		
4 Add lines 1 through 3.	4		
5 Depreciation and depletion	5		
6 Portion of operating expenses paid or incurred for production or collection of gross income or for management, conservation, or maintenance of property held for production of income (see instructions)	6		
7 Other expenses (see instructions)	7		
8 **Adjusted Net Income** (subtract lines 5, 6, and 7 from line 4)	8		

Section B - Minimum Asset Amount		(A) Prior Year	(B) Current Year (optional)
1 Aggregate fair market value of all non-exempt-use assets (see instructions for short tax year or assets held for part of year):			
a Average monthly value of securities	1a		
b Average monthly cash balances	1b		
c Fair market value of other non-exempt-use assets	1c		
d **Total** (add lines 1a, 1b, and 1c)	1d		
e **Discount** claimed for blockage or other factors (*explain in detail in* **Part VI**):			
2 Acquisition indebtedness applicable to non-exempt-use assets	2		
3 Subtract line 2 from line 1d.	3		
4 Cash deemed held for exempt use. Enter 0.015 of line 3 (for greater amount, see instructions).	4		
5 Net value of non-exempt-use assets (subtract line 4 from line 3)	5		
6 Multiply line 5 by 0.035.	6		
7 Recoveries of prior-year distributions	7		
8 **Minimum Asset Amount** (add line 7 to line 6)	8		

Section C - Distributable Amount		Current Year
1 Adjusted net income for prior year (from Section A, line 8, column A)	1	
2 Enter 0.85 of line 1.	2	
3 Minimum asset amount for prior year (from Section B, line 8, column A)	3	
4 Enter greater of line 2 or line 3.	4	
5 Income tax imposed in prior year	5	
6 **Distributable Amount.** Subtract line 5 from line 4, unless subject to emergency temporary reduction (see instructions).	6	

7 ☐ Check here if the current year is the organization's first as a non-functionally integrated Type III supporting organization (see instructions).

Part V **Type III Non-Functionally Integrated 509(a)(3) Supporting Organizations** *(continued)*

Section D - Distributions			**Current Year**
1	Amounts paid to supported organizations to accomplish exempt purposes	1	
2	Amounts paid to perform activity that directly furthers exempt purposes of supported organizations, in excess of income from activity	2	
3	Administrative expenses paid to accomplish exempt purposes of supported organizations	3	
4	Amounts paid to acquire exempt-use assets	4	
5	Qualified set-aside amounts (prior IRS approval required - *provide details in* **Part VI**)	5	
6	Other distributions (*describe in* **Part VI**). See instructions.	6	
7	**Total annual distributions.** Add lines 1 through 6.	7	
8	Distributions to attentive supported organizations to which the organization is responsive (*provide details in* **Part VI**). See instructions.	8	
9	Distributable amount for 2021 from Section C, line 6	9	
10	Line 8 amount divided by line 9 amount	10	

Section E - Distribution Allocations (see instructions)		(i) **Excess Distributions**	(ii) **Underdistributions Pre-2021**	(iii) **Distributable Amount for 2021**
1	Distributable amount for 2021 from Section C, line 6			
2	Underdistributions, if any, for years prior to 2021 (reasonable cause required - *explain in* **Part VI**). See instructions.			
3	Excess distributions carryover, if any, to 2021			
a	From 2016			
b	From 2017			
c	From 2018			
d	From 2019			
e	From 2020			
f	**Total** of lines 3a through 3e			
g	Applied to underdistributions of prior years			
h	Applied to 2021 distributable amount			
i	Carryover from 2016 not applied (see instructions)			
j	Remainder. Subtract lines 3g, 3h, and 3i from line 3f.			
4	Distributions for 2021 from Section D, line 7: $			
a	Applied to underdistributions of prior years			
b	Applied to 2021 distributable amount			
c	Remainder. Subtract lines 4a and 4b from line 4.			
5	Remaining underdistributions for years prior to 2021, if any. Subtract lines 3g and 4a from line 2. For result greater than zero, *explain in* **Part VI.** See instructions.			
6	Remaining underdistributions for 2021. Subtract lines 3h and 4b from line 1. For result greater than zero, *explain in* **Part VI.** See instructions.			
7	**Excess distributions carryover to 2022.** Add lines 3j and 4c.			
8	Breakdown of line 7:			
a	Excess from 2017			
b	Excess from 2018			
c	Excess from 2019			
d	Excess from 2020			
e	Excess from 2021			

Part VI **Supplemental Information.** Provide the explanations required by Part II, line 10; Part II, line 17a or 17b; Part III, line 12; Part IV, Section A, lines 1, 2, 3b, 3c, 4b, 4c, 5a, 6, 9a, 9b, 9c, 11a, 11b, and 11c; Part IV, Section B, lines 1 and 2; Part IV, Section C, line 1; Part IV, Section D, lines 2 and 3; Part IV, Section E, lines 1c, 2a, 2b, 3a, and 3b; Part V, line 1; Part V, Section B, line 1e; Part V, Section D, lines 5, 6, and 8; and Part V, Section E, lines 2, 5, and 6. Also complete this part for any additional information. (See instructions.)

Schedule B (Form 990)

Department of the Treasury
Internal Revenue Service

Schedule of Contributors

▶ Attach to Form 990 or Form 990-PF.
▶ Go to www.irs.gov/Form990 for the latest information.

OMB No. 1545-0047

2021

Name of the organization

SHINNSTON VOLUNTEER FIRE DEPARTMENT

Employer identification number

Organization type (check one):

Filers of:	Section:
Form 990 or 990-EZ	☒ 501(c)(4) (enter number) organization
	☐ 4947(a)(1) nonexempt charitable trust **not** treated as a private foundation
	☐ 527 political organization
Form 990-PF	☐ 501(c)(3) exempt private foundation
	☐ 4947(a)(1) nonexempt charitable trust treated as a private foundation
	☐ 501(c)(3) taxable private foundation

Check if your organization is covered by the **General Rule** or a **Special Rule.**
Note: Only a section 501(c)(7), (8), or (10) organization can check boxes for both the General Rule and a Special Rule. See instructions.

General Rule

☒ For an organization filing Form 990, 990-EZ, or 990-PF that received, during the year, contributions totaling $5,000 or more (in money or property) from any one contributor. Complete Parts I and II. See instructions for determining a contributor's total contributions.

Special Rules

☐ For an organization described in section 501(c)(3) filing Form 990 or 990-EZ that met the 33 1/3% support test of the regulations under sections 509(a)(1) and 170(b)(1)(A)(vi), that checked Schedule A (Form 990), Part II, line 13, 16a, or 16b, and that received from any one contributor, during the year, total contributions of the greater of **(1)** $5,000; or **(2)** 2% of the amount on (i) Form 990, Part VIII, line 1h; or (ii) Form 990-EZ, line 1. Complete Parts I and II.

☐ For an organization described in section 501(c)(7), (8), or (10) filing Form 990 or 990-EZ that received from any one contributor, during the year, total contributions of more than $1,000 exclusively for religious, charitable, scientific, literary, or educational purposes, or for the prevention of cruelty to children or animals. Complete Parts I (entering "N/A" in column (b) instead of the contributor name and address), II, and III.

☐ For an organization described in section 501(c)(7), (8), or (10) filing Form 990 or 990-EZ that received from any one contributor, during the year, contributions *exclusively* for religious, charitable, etc., purposes, but no such contributions totaled more than $1,000. If this box is checked, enter here the total contributions that were received during the year for an *exclusively* religious, charitable, etc., purpose. Don't complete any of the parts unless the **General Rule** applies to this organization because it received *nonexclusively* religious, charitable, etc., contributions totaling $5,000 or more during the year ..... ▶ $ _____

Caution: An organization that isn't covered by the General Rule and/or the Special Rules doesn't file Schedule B (Form 990), but it **must** answer "No" on Part IV, line 2, of its Form 990; or check the box on line H of its Form 990-EZ or on its Form 990-PF, Part I, line 2, to certify that it doesn't meet the filing requirements of Schedule B (Form 990).

Name of organization

SHINNSTON VOLUNTEER FIRE DEPARTMENT

Employer identification number

Part I **Contributors** (see instructions). Use duplicate copies of Part I if additional space is needed.

(a) No.	(b) Name, address, and ZIP + 4	(c) Total contributions	(d) Type of contribution
1	N/A	$ 50,000.	Person [X] Payroll [ ] Noncash [ ] (Complete Part II for noncash contributions.)
2	N/A	$ 1,011.	Person [X] Payroll [ ] Noncash [ ] (Complete Part II for noncash contributions.)
		$	Person [ ] Payroll [ ] Noncash [ ] (Complete Part II for noncash contributions.)
		$	Person [ ] Payroll [ ] Noncash [ ] (Complete Part II for noncash contributions.)
		$	Person [ ] Payroll [ ] Noncash [ ] (Complete Part II for noncash contributions.)
		$	Person [ ] Payroll [ ] Noncash [ ] (Complete Part II for noncash contributions.)

Name of organization

SHINNSTON VOLUNTEER FIRE DEPARTMENT

Employer identification number

Part II Noncash Property (see instructions). Use duplicate copies of Part II if additional space is needed.

(a) No. from Part I	(b) Description of noncash property given	(c) FMV (or estimate) (See instructions.)	(d) Date received
		$	
(a) No. from Part I	(b) Description of noncash property given	(c) FMV (or estimate) (See instructions.)	(d) Date received
		$	
(a) No. from Part I	(b) Description of noncash property given	(c) FMV (or estimate) (See instructions.)	(d) Date received
		$	
(a) No. from Part I	(b) Description of noncash property given	(c) FMV (or estimate) (See instructions.)	(d) Date received
		$	
(a) No. from Part I	(b) Description of noncash property given	(c) FMV (or estimate) (See instructions.)	(d) Date received
		$	
(a) No. from Part I	(b) Description of noncash property given	(c) FMV (or estimate) (See instructions.)	(d) Date received
		$	

Name of organization

SHINNSTON VOLUNTEER FIRE DEPARTMENT

Employer identification number

Part III **Exclusively religious, charitable, etc., contributions to organizations described in section 501(c)(7), (8), or (10) that total more than $1,000 for the year from any one contributor.** Complete columns **(a)** through **(e)** and the following line entry. For organizations completing Part III, enter the total of exclusively religious, charitable, etc., contributions of **$1,000 or less** for the year. (Enter this info. once.) ▶ $

Use duplicate copies of Part III if additional space is needed.

(a) No. from Part I	(b) Purpose of gift	(c) Use of gift	(d) Description of how gift is held

(e) Transfer of gift

Transferee's name, address, and ZIP + 4	Relationship of transferor to transferee

(a) No. from Part I	(b) Purpose of gift	(c) Use of gift	(d) Description of how gift is held

(e) Transfer of gift

Transferee's name, address, and ZIP + 4	Relationship of transferor to transferee

(a) No. from Part I	(b) Purpose of gift	(c) Use of gift	(d) Description of how gift is held

(e) Transfer of gift

Transferee's name, address, and ZIP + 4	Relationship of transferor to transferee

(a) No. from Part I	(b) Purpose of gift	(c) Use of gift	(d) Description of how gift is held

(e) Transfer of gift

Transferee's name, address, and ZIP + 4	Relationship of transferor to transferee

SCHEDULE D (Form 990)

Department of the Treasury
Internal Revenue Service

Supplemental Financial Statements

▶ Complete if the organization answered "Yes" on Form 990, Part IV, line 6, 7, 8, 9, 10, 11a, 11b, 11c, 11d, 11e, 11f, 12a, or 12b.
▶ Attach to Form 990.
▶ Go to www.irs.gov/Form990 for instructions and the latest information.

OMB No. 1545-0047

2021

Open to Public Inspection

Name of the organization

SHINNSTON VOLUNTEER FIRE DEPARTMENT

Employer identification number

Part I Organizations Maintaining Donor Advised Funds or Other Similar Funds or Accounts. Complete if the organization answered "Yes" on Form 990, Part IV, line 6.

		(a) Donor advised funds	(b) Funds and other accounts
1	Total number at end of year		
2	Aggregate value of contributions to (during year)		
3	Aggregate value of grants from (during year)		
4	Aggregate value at end of year		

5 Did the organization inform all donors and donor advisors in writing that the assets held in donor advised funds are the organization's property, subject to the organization's exclusive legal control? ☐ Yes ☐ No

6 Did the organization inform all grantees, donors, and donor advisors in writing that grant funds can be used only for charitable purposes and not for the benefit of the donor or donor advisor, or for any other purpose conferring impermissible private benefit? ☐ Yes ☐ No

Part II Conservation Easements. Complete if the organization answered "Yes" on Form 990, Part IV, line 7.

1 Purpose(s) of conservation easements held by the organization (check all that apply).

☐ Preservation of land for public use (for example, recreation or education)
☐ Protection of natural habitat
☐ Preservation of open space
☐ Preservation of a historically important land area
☐ Preservation of a certified historic structure

2 Complete lines 2a through 2d if the organization held a qualified conservation contribution in the form of a conservation easement on the last day of the tax year.

		Held at the End of the Tax Year
a	Total number of conservation easements	2a
b	Total acreage restricted by conservation easements	2b
c	Number of conservation easements on a certified historic structure included in (a)	2c
d	Number of conservation easements included in (c) acquired after 7/25/06, and not on a historic structure listed in the National Register	2d

3 Number of conservation easements modified, transferred, released, extinguished, or terminated by the organization during the tax year ▶ _____

4 Number of states where property subject to conservation easement is located ▶ _____

5 Does the organization have a written policy regarding the periodic monitoring, inspection, handling of violations, and enforcement of the conservation easements it holds? ☐ Yes ☐ No

6 Staff and volunteer hours devoted to monitoring, inspecting, handling of violations, and enforcing conservation easements during the year ▶ _____

7 Amount of expenses incurred in monitoring, inspecting, handling of violations, and enforcing conservation easements during the year ▶ $ _____

8 Does each conservation easement reported on line 2(d) above satisfy the requirements of section 170(h)(4)(B)(i) and section 170(h)(4)(B)(ii)? ☐ Yes ☐ No

9 In Part XIII, describe how the organization reports conservation easements in its revenue and expense statement and balance sheet, and include, if applicable, the text of the footnote to the organization's financial statements that describes the organization's accounting for conservation easements.

Part III Organizations Maintaining Collections of Art, Historical Treasures, or Other Similar Assets.

Complete if the organization answered "Yes" on Form 990, Part IV, line 8.

1a If the organization elected, as permitted under FASB ASC 958, not to report in its revenue statement and balance sheet works of art, historical treasures, or other similar assets held for public exhibition, education, or research in furtherance of public service, provide in Part XIII the text of the footnote to its financial statements that describes these items.

b If the organization elected, as permitted under FASB ASC 958, to report in its revenue statement and balance sheet works of art, historical treasures, or other similar assets held for public exhibition, education, or research in furtherance of public service, provide the following amounts relating to these items:

(i) Revenue included on Form 990, Part VIII, line 1 ▶ $ _____

(ii) Assets included in Form 990, Part X ▶ $ _____

2 If the organization received or held works of art, historical treasures, or other similar assets for financial gain, provide the following amounts required to be reported under FASB ASC 958 relating to these items:

a Revenue included on Form 990, Part VIII, line 1 ▶ $ _____

b Assets included in Form 990, Part X ▶ $ _____

Part III Organizations Maintaining Collections of Art, Historical Treasures, or Other Similar Assets *(continued)*

3 Using the organization's acquisition, accession, and other records, check any of the following that make significant use of its collection items (check all that apply):

a ☐ Public exhibition
b ☐ Scholarly research
c ☐ Preservation for future generations
d ☐ Loan or exchange program
e ☐ Other _____

4 Provide a description of the organization's collections and explain how they further the organization's exempt purpose in Part XIII.

5 During the year, did the organization solicit or receive donations of art, historical treasures, or other similar assets to be sold to raise funds rather than to be maintained as part of the organization's collection? ☐ Yes ☐ No

Part IV Escrow and Custodial Arrangements. Complete if the organization answered "Yes" on Form 990, Part IV, line 9, or reported an amount on Form 990, Part X, line 21.

1a Is the organization an agent, trustee, custodian or other intermediary for contributions or other assets not included on Form 990, Part X? ☐ Yes ☐ No

b If "Yes," explain the arrangement in Part XIII and complete the following table:

		Amount
c Beginning balance	1c	
d Additions during the year	1d	
e Distributions during the year	1e	
f Ending balance	1f	

2a Did the organization include an amount on Form 990, Part X, line 21, for escrow or custodial account liability? ☐ Yes ☐ No

b If "Yes," explain the arrangement in Part XIII. Check here if the explanation has been provided on Part XIII ☐

Part V Endowment Funds. Complete if the organization answered "Yes" on Form 990, Part IV, line 10.

	(a) Current year	(b) Prior year	(c) Two years back	(d) Three years back	(e) Four years back
1a Beginning of year balance					
b Contributions					
c Net investment earnings, gains, and losses					
d Grants or scholarships					
e Other expenditures for facilities and programs					
f Administrative expenses					
g End of year balance					

2 Provide the estimated percentage of the current year end balance (line 1g, column (a)) held as:

a Board designated or quasi-endowment ▶ _____ %
b Permanent endowment ▶ _____ %
c Term endowment ▶ _____ %

The percentages on lines 2a, 2b, and 2c should equal 100%.

3a Are there endowment funds not in the possession of the organization that are held and administered for the organization by:

		Yes	No
(i) Unrelated organizations	3a(i)		
(ii) Related organizations	3a(ii)		
b If "Yes" on line 3a(ii), are the related organizations listed as required on Schedule R?	3b		

4 Describe in Part XIII the intended uses of the organization's endowment funds.

Part VI Land, Buildings, and Equipment.

Complete if the organization answered "Yes" on Form 990, Part IV, line 11a. See Form 990, Part X, line 10.

Description of property	(a) Cost or other basis (investment)	(b) Cost or other basis (other)	(c) Accumulated depreciation	(d) Book value
1a Land		252,667.		252,667.
b Buildings		30,695.	16,961.	13,734.
c Leasehold improvements				
d Equipment				
e Other		1,833,827.	1,590,466.	243,361.
Total. Add lines 1a through 1e. *(Column (d) must equal Form 990, Part X, column (B), line 10c.)* ▶				509,762.

Part VII Investments - Other Securities.

Complete if the organization answered "Yes" on Form 990, Part IV, line 11b. See Form 990, Part X, line 12.

(a) Description of security or category (including name of security)	(b) Book value	(c) Method of valuation: Cost or end-of-year market value
(1) Financial derivatives		
(2) Closely held equity interests		
(3) Other		
(A)		
(B)		
(C)		
(D)		
(E)		
(F)		
(G)		
(H)		
Total. (Col. (b) must equal Form 990, Part X, col. (B) line 12.) ▶		

Part VIII Investments - Program Related.

Complete if the organization answered "Yes" on Form 990, Part IV, line 11c. See Form 990, Part X, line 13.

(a) Description of investment	(b) Book value	(c) Method of valuation: Cost or end-of-year market value
(1)		
(2)		
(3)		
(4)		
(5)		
(6)		
(7)		
(8)		
(9)		
Total. (Col. (b) must equal Form 990, Part X, col. (B) line 13.) ▶		

Part IX Other Assets.

Complete if the organization answered "Yes" on Form 990, Part IV, line 11d. See Form 990, Part X, line 15.

(a) Description	(b) Book value
(1)	
(2)	
(3)	
(4)	
(5)	
(6)	
(7)	
(8)	
(9)	
Total. *(Column (b) must equal Form 990, Part X, col. (B) line 15.)* ▶	

Part X Other Liabilities.

Complete if the organization answered "Yes" on Form 990, Part IV, line 11e or 11f. See Form 990, Part X, line 25.

1. (a) Description of liability	(b) Book value
(1) Federal income taxes	
(2)	
(3)	
(4)	
(5)	
(6)	
(7)	
(8)	
(9)	
Total. *(Column (b) must equal Form 990, Part X, col. (B) line 25.)* ▶	

2. Liability for uncertain tax positions. In Part XIII, provide the text of the footnote to the organization's financial statements that reports the organization's liability for uncertain tax positions under FASB ASC 740. Check here if the text of the footnote has been provided in Part XIII ☐

Part XI Reconciliation of Revenue per Audited Financial Statements With Revenue per Return.

Complete if the organization answered "Yes" on Form 990, Part IV, line 12a.

1	Total revenue, gains, and other support per audited financial statements			1	
2	Amounts included on line 1 but not on Form 990, Part VIII, line 12:				
a	Net unrealized gains (losses) on investments	2a			
b	Donated services and use of facilities	2b			
c	Recoveries of prior year grants	2c			
d	Other (Describe in Part XIII.)	2d			
e	Add lines **2a** through **2d**			2e	
3	Subtract line **2e** from line **1**			3	
4	Amounts included on Form 990, Part VIII, line 12, but not on line 1:				
a	Investment expenses not included on Form 990, Part VIII, line 7b	4a			
b	Other (Describe in Part XIII.)	4b			
c	Add lines **4a** and **4b**			4c	
5	Total revenue. Add lines **3** and **4c.** *(This must equal Form 990, Part I, line 12.)*			5	

Part XII Reconciliation of Expenses per Audited Financial Statements With Expenses per Return.

Complete if the organization answered "Yes" on Form 990, Part IV, line 12a.

1	Total expenses and losses per audited financial statements			1	
2	Amounts included on line 1 but not on Form 990, Part IX, line 25:				
a	Donated services and use of facilities	2a			
b	Prior year adjustments	2b			
c	Other losses	2c			
d	Other (Describe in Part XIII.)	2d			
e	Add lines **2a** through **2d**			2e	
3	Subtract line **2e** from line **1**			3	
4	Amounts included on Form 990, Part IX, line 25, but not on line 1:				
a	Investment expenses not included on Form 990, Part VIII, line 7b	4a			
b	Other (Describe in Part XIII.)	4b			
c	Add lines **4a** and **4b**			4c	
5	Total expenses. Add lines **3** and **4c.** *(This must equal Form 990, Part I, line 18.)*			5	

Part XIII Supplemental Information.

Provide the descriptions required for Part II, lines 3, 5, and 9; Part III, lines 1a and 4; Part IV, lines 1b and 2b; Part V, line 4; Part X, line 2; Part XI, lines 2d and 4b; and Part XII, lines 2d and 4b. Also complete this part to provide any additional information.

SCHEDULE I
(Form 990)

Department of the Treasury
Internal Revenue Service

Grants and Other Assistance to Organizations, Governments, and Individuals in the United States

Complete if the organization answered "Yes" on Form 990, Part IV, line 21 or 22.

▶ **Attach to Form 990.**

▶ **Go to www.irs.gov/Form990 for the latest information.**

OMB No. 1545-0047

2021

Open to Public Inspection

Name of the organization
SHINNSTON VOLUNTEER FIRE DEPARTMENT

Employer identification number

Part I **General Information on Grants and Assistance**

1 Does the organization maintain records to substantiate the amount of the grants or assistance, the grantees' eligibility for the grants or assistance, and the selection criteria used to award the grants or assistance? ..... [X] Yes [ ] No

2 Describe in Part IV the organization's procedures for monitoring the use of grant funds in the United States.

Part II **Grants and Other Assistance to Domestic Organizations and Domestic Governments.** Complete if the organization answered "Yes" on Form 990, Part IV, line 21, for any recipient that received more than $5,000. Part II can be duplicated if additional space is needed.

1 (a) Name and address of organization or government	(b) EIN	(c) IRC section (if applicable)	(d) Amount of cash grant	(e) Amount of noncash assistance	(f) Method of valuation (book, FMV, appraisal, other)	(g) Description of noncash assistance	(h) Purpose of grant or assistance

2 Enter total number of section 501(c)(3) and government organizations listed in the line 1 table ..... ▶

3 Enter total number of other organizations listed in the line 1 table ..... ▶

Part III **Grants and Other Assistance to Domestic Individuals.** Complete if the organization answered "Yes" on Form 990, Part IV, line 22. Part III can be duplicated if additional space is needed.

(a) Type of grant or assistance	(b) Number of recipients	(c) Amount of cash grant	(d) Amount of non-cash assistance	(e) Method of valuation (book, FMV, appraisal, other)	(f) Description of noncash assistance

Part IV **Supplemental Information.** Provide the information required in Part I, line 2; Part III, column (b); and any other additional information.

SCHEDULE O (Form 990)

Department of the Treasury
Internal Revenue Service

Supplemental Information to Form 990 or 990-EZ

Complete to provide information for responses to specific questions on Form 990 or 990-EZ or to provide any additional information.
▶ Attach to Form 990 or Form 990-EZ.
▶ Go to www.irs.gov/Form990 for the latest information.

OMB No. 1545-0047

2021

Open to Public Inspection

Name of the organization

SHINNSTON VOLUNTEER FIRE DEPARTMENT

Employer identification number

FORM 990, PART I, LINE 1, DESCRIPTION OF ORGANIZATION MISSION:

ADDITIONALLY, THEY PROVIDE FIRST RESPONSE SERVICES FOR THESE SAME COMMUNITIES.

FORM 990, PART VI, SECTION B, LINE 11B:

DURING THE IRS'S DEVELOPMENT OF THIS FORM, THE AICPA SUGGESTED THAT COMPLIANCE AND FIDUCIARY DUTIES WOULD BE BEST MET IF A NON-PROFIT BOARD OF DIRECTORS, AUDIT COMMITTEE OR OTHER APPROPRIATE COMMITTEE RECEIVED CONFIRMATION FROM THE PARTY OR PARTIES RESPONSIBLE FOR FILING THE TAX RETURN THAT IT HAD BEEN PREPARED BY A QUALIFIED PERSON(S) OR FIRM AND HAD BEEN FILED IN A TIMELY MANNER, RATHER THAN REVIEWING THE FORM IN LINE-BY-LINE DETAIL WITH MANAGEMENT. WE ARE CONCERNED THAT THE VAST MAJORITY OF NON-PROFIT BOARD MEMBERS ARE NOT IN A POSITION TO REVIEW A FORM 990 AND FURTHER WILL BE CONCERNED TO DO SO AS TO WHAT THAT MAY IMPLY ABOUT COMPLIANCE. MOST NON-PROFITS HIRE CPA FIRMS OR OTHER TAX PROFESSIONALS TO PREPARE FORMS 990 AND BOARD MEMBERS GENERALLY FEEL THIS IS THE APPROPRIATE FIDUCIARY PROCESS. THE BOARD OR AUDIT COMMITTEE'S ROLE THEN IS TO EVALUATE THE COMPETENCY OF THE PERSON(S) OR FIRM HIRED TO PREPARE THE RETURN AND TO DETERMINE IT IS APPROPRIATELY FILED. WE HAVE TAKEN THESE STEPS WITH OUR BOARD.

FORM 990, PART VI, SECTION C, LINE 19:

THE ORGANIZATION MAKES ITS GOVERNING DOCUMENTS, CONFLICT OF INTEREST POLICY, AND TAX RETURNS AVAILABLE TO THE PUBLIC UPON REQUEST.

2021 DEPRECIATION AND AMORTIZATION REPORT

FORM 990 PAGE 10 990

Asset No.	Description	Date Acquired	Method	Life	Conv	Line No.	Unadjusted Cost Or Basis	Bus % Excl	Section 179 Expense	* Reduction In Basis	Basis For Depreciation	Beginning Accumulated Depreciation	Current Sec 179 Expense	Current Year Deduction	Ending Accumulated Depreciation
1	1992 RADIO & MISC EQUIPMENT	06/25/92	SL	20.00		16	21,927.				21,927.	21,918.		0.	21,918.
2	1995 PIERCE LANCE PUMPER	03/28/95	SL	20.00		16	235,546.				235,546.	235,540.		0.	235,540.
3	FIRE HOSE & HOSE NOZZLLES	03/20/02	SL	7.00		16	2,274.				2,274.	2,274.		0.	2,274.
4	BREATHING APPARATUS	01/13/03	SL	7.00		16	3,638.				3,638.	3,638.		0.	3,638.
5	AIR PACKS	02/27/03	SL	7.00		16	5,596.				5,596.	5,596.		0.	5,596.
6	NEW FIRE RADIO	05/09/03	SL	7.00		16	2,316.				2,316.	2,316.		0.	2,316.
7	SQUAD TRUCK	02/24/04	SL	5.00		16	33,234.				33,234.	33,234.		0.	33,234.
8	RECERTIFICATION OF AIR BOTTLES	05/25/04	SL	7.00		16	2,991.				2,991.	2,991.		0.	2,991.
9	FIRE RADIOS	10/13/04	SL	7.00		16	7,363.				7,363.	7,101.		0.	7,101.
10	BRUSH FIRE TRUCK	10/15/04	SL	5.00		16	18,805.				18,805.	18,179.		0.	18,179.
11	2005 PIERCE PUMPER TRUCK	10/26/04	SL	5.00		16	227,990.				227,990.	220,390.		0.	220,390.
12	EQUIPMENT PUMPER TRUCK	02/15/05	SL	5.00		16	5,786.				5,786.	5,786.		0.	5,786.
13	ENGINE 103	11/16/04	SL	5.00		16	104,400.				104,400.	102,660.		0.	102,660.
14	EXTRA EQUIPMENT- ENGINE 103	01/03/05	SL	5.00		16	1,867.				1,867.	1,867.		0.	1,867.
15	EQUIPMENT-ENGINE 103	03/16/05	SL	5.00		16	2,822.				2,822.	2,822.		0.	2,822.
16	EQUIPMENT-ENGINE 103	04/29/05	SL	5.00		16	7,251.				7,251.	7,251.		0.	7,251.
17	RECERTIFICATION OF AIR BOTTLES	03/16/05	SL	7.00		16	711.				711.	711.		0.	711.
18	PORTABLE RADIOS	06/30/06	SL	7.00		16	6,668.				6,668.	6,668.		0.	6,668.

128111 04-01-21

(D) - Asset disposed

* ITC, Salvage, Bonus, Commercial Revitalization Deduction, GO Zone

FORM 990 PAGE 10 990

Asset No.	Description	Date Acquired	Method	Life	Conv	Line No.	Unadjusted Cost Or Basis	Bus % Excl	Section 179 Expense	* Reduction In Basis	Basis For Depreciation	Beginning Accumulated Depreciation	Current Sec 179 Expense	Current Year Deduction	Ending Accumulated Depreciation
19	AED'S	04/25/08	SL	7.00		16	3,041.				3,041.	3,041.		0.	3,041.
20	NEW FURNACE	01/15/94	SL	15.00		16	4,254.				4,254.	4,254.		0.	4,254.
21	KITCHEN ADDITION	11/03/95	SL	20.00		16	18,980.				18,980.	18,980.		0.	18,980.
22	ELECTRICAL WORK	03/26/99	SL	39.00	MM	16	6,913.				6,913.	3,946.		177.	4,123.
23	NEW STEPS	06/23/00	SL	39.00	MM	16	3,073.				3,073.	1,586.		79.	1,665.
24	REMODELING	06/30/01	SL	39.00	MM	16	20,709.				20,709.	10,642.		531.	11,173.
25	FURNACE PARTS	02/15/05	SL	7.00		16	1,730.				1,730.	1,730.		0.	1,730.
26	FURNITURE	11/05/03	SL	7.00		16	2,553.				2,553.	2,494.		0.	2,494.
27	TABLES & CHAIRS	11/05/03	SL	7.00		16	1,166.				1,166.	1,141.		0.	1,141.
28	AED'S	08/06/08	SL	7.00		16	2,971.				2,971.	2,968.		0.	2,968.
29	FIRE HOSE	08/08/08	SL	7.00		16	2,435.				2,435.	2,435.		0.	2,435.
30	COMPUTERS	01/14/09	SL	7.00		16	2,521.				2,521.	2,521.		0.	2,521.
31	7 MONITORS	05/30/09	SL	7.00		16	2,782.				2,782.	2,779.		0.	2,779.
32	PORTABLE GENERATOR	04/01/77	SL	7.00		16	4,500.				4,500.	4,500.		0.	4,500.
33	PORTABLE PUMP	04/01/77	SL	7.00		16	500.				500.	500.		0.	500.
34	HOSE & LADDERS	04/01/77	SL	7.00		16	2,200.				2,200.	2,200.		0.	2,200.
35	5 BREATHING UNITS	04/01/77	SL	7.00		16	4,500.				4,500.	4,500.		0.	4,500.
36	PARTS & LABOR	03/21/00	SL	5.00		16	6,132.				6,132.	6,132.		0.	6,132.

2021 DEPRECIATION AND AMORTIZATION REPORT

FORM 990 PAGE 10 990

Asset No.	Description	Date Acquired	Method	Life	Conv	Line No.	Unadjusted Cost Or Basis	Bus % Excl	Section 179 Expense	* Reduction In Basis	Basis For Depreciation	Beginning Accumulated Depreciation	Current Sec 179 Expense	Current Year Deduction	Ending Accumulated Depreciation
37	PARTS & LABOR	06/30/01	SL	5.00		16	3,293.				3,293.	3,293.		0.	3,293.
38	PORTABLE PUMP	10/04/79	SL	7.00		16	1,500.				1,500.	1,500.		0.	1,500.
39	SPECIAL LIGHTS	10/04/79	SL	7.00		16	800.				800.	800.		0.	800.
40	4 BRATHING UNITS	10/01/86	SL	7.00		16	3,600.				3,600.	3,600.		0.	3,600.
41	PORTABLE DEFIBRILLATOR	10/19/98	SL	7.00		16	3,724.				3,724.	3,724.		0.	3,724.
42	NEW RADIOS	01/19/99	SL	7.00		16	2,940.				2,940.	2,940.		0.	2,940.
43	ENGINE 101 BODY	12/01/87	SL	10.00		16	6,500.				6,500.	6,500.		0.	6,500.
44	ENGINE 101 DOORS	12/09/87	SL	10.00		16	1,696.				1,696.	1,696.		0.	1,696.
45	ENGINE 101 LIGHT BAR	02/03/87	SL	10.00		16	723.				723.	723.		0.	723.
46	ENGINE 101 GENERATOR	03/05/87	SL	10.00		16	4,922.				4,922.	4,922.		0.	4,922.
47	ENGINE 101 RADIO	04/01/87	SL	10.00		16	3,153.				3,153.	3,153.		0.	3,153.
48	ENGINE 101 REFURBISH	04/07/87	SL	10.00		16	68,800.				68,800.	68,800.		0.	68,800.
49	ENGINE 102 PUMP	12/17/87	SL	10.00		16	2,800.				2,800.	2,800.		0.	2,800.
50	ENGINE 101 RADIO/REPEAT	09/01/88	SL	10.00		16	5,639.				5,639.	5,639.		0.	5,639.
51	ENGINE 101 REBUILT ENGINE	10/01/88	SL	10.00		16	2,960.				2,960.	2,960.		0.	2,960.
52	ENGINE 101 DRAFT HOSE	11/01/88	SL	10.00		16	912.				912.	912.		0.	912.
53	ENGINE 102 TEMPEST FAN	06/01/95	SL	10.00		16	1,421.				1,421.	1,421.		0.	1,421.
54	20 NEW MONITORS	08/01/87	SL	10.00		16	8,000.				8,000.	8,000.		0.	8,000.

128111 04-01-21

(D) - Asset disposed

* ITC, Salvage, Bonus, Commercial Revitalization Deduction, GO Zone

FORM 990 PAGE 10 990

Asset No.	Description	Date Acquired	Method	Life	Conv	Line No.	Unadjusted Cost Or Basis	Bus % Excl	Section 179 Expense	* Reduction In Basis	Basis For Depreciation	Beginning Accumulated Depreciation	Current Sec 179 Expense	Current Year Deduction	Ending Accumulated Depreciation
55	XL98A SAW	12/10/89	SL	10.00		16	650.				650.	650.		0.	650.
56	20 BREATHING UNITS HOSE	02/01/96	SL	10.00		16	12,633.				12,633.	12,633.		0.	12,633.
57	6 BREATHING UNITS	12/01/99	SL	7.00		16	17,318.				17,318.	17,318.		0.	17,318.
58	FIRE RADIOS	05/19/99	SL	7.00		16	863.				863.	863.		0.	863.
59	PARTS FOR BREATHING APPARATUS	02/15/98	SL	10.00		16	1,245.				1,245.	1,245.		0.	1,245.
60	FIRE HOSE	10/04/00	SL	7.00		16	1,229.				1,229.	1,229.		0.	1,229.
61	REBUILT ENGINE	10/28/02	SL	5.00		16	13,216.				13,216.	13,216.		0.	13,216.
62	TWO STORY BUILDING	02/01/76	SL	20.00		16	175,000.				175,000.	175,000.		0.	175,000.
63	FRONT PORCH ADDITION	09/10/87	SL	15.00		16	1,979.				1,979.	1,979.		0.	1,979.
64	GARAGE DOORS	10/01/87	SL	15.00		16	570.				570.	570.		0.	570.
65	NEW ROOF	11/04/87	SL	20.00		16	14,000.				14,000.	14,000.		0.	14,000.
66	FRONT DOORS	04/11/88	SL	15.00		16	1,550.				1,550.	1,550.		0.	1,550.
67	OFFICE ADDITIONS	06/20/88	SL	15.00		16	1,392.				1,392.	1,392.		0.	1,392.
68	NEW FURNACE	09/30/89	SL	15.00		16	8,700.				8,700.	8,700.		0.	8,700.
69	DOOR	02/15/98	SL	10.00		16	736.				736.	736.		0.	736.
70	SIGN	06/15/98	SL	10.00		16	1,242.				1,242.	1,242.		0.	1,242.
71	NEW RADIOS	01/07/79	SL	7.00		16	1,100.				1,100.	1,100.		0.	1,100.
72	NEW MONITORS	08/17/81	SL	7.00		16	1,455.				1,455.	1,455.		0.	1,455.

FORM 990 PAGE 10 990

Asset No.	Description	Date Acquired	Method	Life	Conv	Line No.	Unadjusted Cost Or Basis	Bus % Excl	Section 179 Expense	* Reduction In Basis	Basis For Depreciation	Beginning Accumulated Depreciation	Current Sec 179 Expense	Current Year Deduction	Ending Accumulated Depreciation
73	FURNITURE/FIXTURES	04/01/86	SL	7.00		16	1,579.				1,579.	1,579.		0.	1,579.
74	INTERCOM SYSTEM	08/01/88	SL	7.00		16	833.				833.	833.		0.	833.
75	20 NEW MONITORS	02/01/91	SL	7.00		16	4,800.				4,800.	4,800.		0.	4,800.
76	WASHER & DRYER	09/25/91	SL	7.00		16	490.				490.	490.		0.	490.
77	THOMPSONS APPLIANCES	03/01/96	SL	10.00		16	1,133.				1,133.	1,133.		0.	1,133.
78	TV & VCR	01/26/99	SL	7.00		16	1,037.				1,037.	1,037.		0.	1,037.
79	WEIGHTS	03/26/99	SL	7.00		16	1,440.				1,440.	1,440.		0.	1,440.
80	COPIER	11/27/00	SL	5.00		16	1,300.				1,300.	1,300.		0.	1,300.
81	TABLES - UPSTAIRS	11/14/00	SL	7.00		16	1,767.				1,767.	1,767.		0.	1,767.
82	COMPUTERS - OFFICE	09/09/02	SL	5.00		16	3,500.				3,500.	3,500.		0.	3,500.
83	COMPUTERS - OFFICE	09/23/02	SL	5.00		16	3,000.				3,000.	3,000.		0.	3,000.
84	LAND - 37 BRIDGE STREET	02/01/76	L				9,000.				9,000.			0.	
85	LAND - LALAH MARTIN PROPERTY	06/01/08	L				11,033.				11,033.			0.	
86	LAND - 27 BRIDGE STREET	02/01/76	L				17,112.				17,112.			0.	
87	LAND - DOUGLAS PROPERTY	06/01/08	L				66,746.				66,746.			0.	
88	LAND - MARIE PRICE PROPERTY	06/01/08	L				49,646.				49,646.			0.	
89	LAND - FRANK OLIVER PROPERTY	06/01/08	L				44,130.				44,130.			0.	
90	COMPUTERS	09/16/09	SL	5.00		16	1,905.				1,905.	1,905.		0.	1,905.

FORM 990 PAGE 10 990

Asset No.	Description	Date Acquired	Method	Life	Conv	Line No.	Unadjusted Cost Or Basis	Bus % Excl	Section 179 Expense	* Reduction In Basis	Basis For Depreciation	Beginning Accumulated Depreciation	Current Sec 179 Expense	Current Year Deduction	Ending Accumulated Depreciation
91	PIERCE FIRE TRUCK	09/21/11	SL	15.00		16	547,928.				547,928.	356,157.		36,529.	392,686.
92	THERMAL IMAGING CAMERA	10/20/14	SL	5.00		16	6,000.				6,000.	6,000.		0.	6,000.
93	OUTSIDE LIGHTS	09/11/16	SL	7.00		16	6,136.				6,136.	4,238.		877.	5,115.
94	NEW SELF CONTAINED BREATHING APPARATUS	03/17/18	SL	7.00		16	35,443.				35,443.	16,455.		5,063.	21,518.
95	NEW SELF CONTAINED BREATHING APPARATUS	04/12/18	SL	7.00		16	36,178.				36,178.	16,796.		5,168.	21,964.
96	RADIO EQUIPMENT	04/01/22	SL	7.00		16	18,030.				18,030.			644.	644.
97	TRUCK BED FOR SQUAD 10	06/15/22	SL	7.00		16	15,000.				15,000.			179.	179.
98	NEW PORTABLE RADIOS	06/15/22	SL	7.00		16	16,617.				16,617.			198.	198.
99	RUSSELL PROPERTY	08/13/21	L				55,000.				55,000.			0.	
	* TOTAL 990 PAGE 10 DEPR						2,117,189.				2,117,189.	1,557,982.		49,445.	1,607,427.
	CURRENT YEAR ACTIVITY														
	BEGINNING BALANCE						2,012,542.			0.	2,012,542.	1,557,982.			1,606,406.
	ACQUISITIONS						104,647.			0.	104,647.	0.			1,021.
	DISPOSITIONS/RETIRED						0.			0.	0.	0.			0.
	ENDING BALANCE						2,117,189.			0.	2,117,189.	1,557,982.			1,607,427.
	ENDING ACCUM DEPR											1,607,427.			
	ENDING BOOK VALUE											509,762.			

128111 04-01-21

(D) - Asset disposed

* ITC, Salvage, Bonus, Commercial Revitalization Deduction, GO Zone

- CURRENT YEAR FEDERAL - SHINNSTON VOLUNTEER FIRE DEPARTMENT

Asset No.	Description	Date Acquired	Method	Life	Line No.	Unadjusted Cost Or Basis	Bus % Excl	* Reduction In Basis	Basis For Depreciation	Accumulated Depreciation	Current Sec 179	Current Year Deduction
1	1992 RADIO & MISC EQUIPMENT	06 25 92	SL	20.00	16	21,927.			21,927.	21,918.		0.
2	1995 PIERCE LANCE PUMPER	03 28 95	SL	20.00	16	235,546.			235,546.	235,540.		0.
3	FIRE HOSE & HOSE NOZZLLES	03 20 02	SL	7.00	16	2,274.			2,274.	2,274.		0.
4	BREATHING APPARATUS	01 13 03	SL	7.00	16	3,638.			3,638.	3,638.		0.
5	AIR PACKS	02 27 03	SL	7.00	16	5,596.			5,596.	5,596.		0.
6	NEW FIRE RADIO	05 09 03	SL	7.00	16	2,316.			2,316.	2,316.		0.
7	SQUAD TRUCK	02 24 04	SL	5.00	16	33,234.			33,234.	33,234.		0.
8	RECERTIFICATION OF AIR BOTTLES	05 25 04	SL	7.00	16	2,991.			2,991.	2,991.		0.
9	FIRE RADIOS	10 13 04	SL	7.00	16	7,363.			7,363.	7,101.		0.
10	BRUSH FIRE TRUCK	10 15 04	SL	5.00	16	18,805.			18,805.	18,179.		0.
11	2005 PIERCE PUMPER TRUCK	10 26 04	SL	5.00	16	227,990.			227,990.	220,390.		0.
12	EQUIPMENT PUMPER TRUCK	02 15 05	SL	5.00	16	5,786.			5,786.	5,786.		0.
13	ENGINE 103	11 16 04	SL	5.00	16	104,400.			104,400.	102,660.		0.
14	EXTRA EQUIPMENT-ENGINE 103	01 03 05	SL	5.00	16	1,867.			1,867.	1,867.		0.
15	EQUIPMENT-ENGINE 103	03 16 05	SL	5.00	16	2,822.			2,822.	2,822.		0.
16	EQUIPMENT-ENGINE 103	04 29 05	SL	5.00	16	7,251.			7,251.	7,251.		0.
17	RECERTIFICATION OF AIR BOTTLES	03 16 05	SL	7.00	16	711.			711.	711.		0.
18	PORTABLE RADIOS	06 30 06	SL	7.00	16	6,668.			6,668.	6,668.		0.

(D) - Asset disposed

* ITC, Section 179, Salvage, Bonus, Commercial Revitalization Deduction

- CURRENT YEAR FEDERAL - SHINNSTON VOLUNTEER FIRE DEPARTMENT

Asset No.	Description	Date Acquired	Method	Life	Line No.	Unadjusted Cost Or Basis	Bus % Excl	* Reduction In Basis	Basis For Depreciation	Accumulated Depreciation	Current Sec 179	Current Year Deduction
19	AED'S	04 25 08	SL	7.00	16	3,041.			3,041.	3,041.		0.
20	NEW FURNACE	01 15 94	SL	15.00	16	4,254.			4,254.	4,254.		0.
21	KITCHEN ADDITION	11 03 95	SL	20.00	16	18,980.			18,980.	18,980.		0.
22	ELECTRICAL WORK	03 26 99	SL	39.00	16	6,913.			6,913.	3,946.		177.
23	NEW STEPS	06 23 00	SL	39.00	16	3,073.			3,073.	1,586.		79.
24	REMODELING	06 30 01	SL	39.00	16	20,709.			20,709.	10,642.		531.
25	FURNACE PARTS	02 15 05	SL	7.00	16	1,730.			1,730.	1,730.		0.
26	FURNITURE	11 05 03	SL	7.00	16	2,553.			2,553.	2,494.		0.
27	TABLES & CHAIRS	11 05 03	SL	7.00	16	1,166.			1,166.	1,141.		0.
28	AED'S	08 06 08	SL	7.00	16	2,971.			2,971.	2,968.		0.
29	FIRE HOSE	08 08 08	SL	7.00	16	2,435.			2,435.	2,435.		0.
30	COMPUTERS	01 14 09	SL	7.00	16	2,521.			2,521.	2,521.		0.
31	7 MONITORS	05 30 09	SL	7.00	16	2,782.			2,782.	2,779.		0.
32	PORTABLE GENERATOR	04 01 77	SL	7.00	16	4,500.			4,500.	4,500.		0.
33	PORTABLE PUMP	04 01 77	SL	7.00	16	500.			500.	500.		0.
34	HOSE & LADDERS	04 01 77	SL	7.00	16	2,200.			2,200.	2,200.		0.
35	5 BREATHING UNITS	04 01 77	SL	7.00	16	4,500.			4,500.	4,500.		0.
36	PARTS & LABOR	03 21 00	SL	5.00	16	6,132.			6,132.	6,132.		0.

(D) - Asset disposed

* ITC, Section 179, Salvage, Bonus, Commercial Revitalization Deduction

- CURRENT YEAR FEDERAL - SHINNSTON VOLUNTEER FIRE DEPARTMENT

Asset No.	Description	Date Acquired	Method	Life	Line No.	Unadjusted Cost Or Basis	Bus % Excl	* Reduction In Basis	Basis For Depreciation	Accumulated Depreciation	Current Sec 179	Current Year Deduction
37	PARTS & LABOR	06 30 01	SL	5.00	16	3,293.			3,293.	3,293.		0.
38	PORTABLE PUMP	10 04 79	SL	7.00	16	1,500.			1,500.	1,500.		0.
39	SPECIAL LIGHTS	10 04 79	SL	7.00	16	800.			800.	800.		0.
40	4 BRATHING UNITS	10 01 86	SL	7.00	16	3,600.			3,600.	3,600.		0.
41	PORTABLE DEFIBRILLATOR	10 19 98	SL	7.00	16	3,724.			3,724.	3,724.		0.
42	NEW RADIOS	01 19 99	SL	7.00	16	2,940.			2,940.	2,940.		0.
43	ENGINE 101 BODY	12 01 87	SL	10.00	16	6,500.			6,500.	6,500.		0.
44	ENGINE 101 DOORS	12 09 87	SL	10.00	16	1,696.			1,696.	1,696.		0.
45	ENGINE 101 LIGHT BAR	02 03 87	SL	10.00	16	723.			723.	723.		0.
46	ENGINE 101 GENERATOR	03 05 87	SL	10.00	16	4,922.			4,922.	4,922.		0.
47	ENGINE 101 RADIO	04 01 87	SL	10.00	16	3,153.			3,153.	3,153.		0.
48	ENGINE 101 REFURBISH	04 07 87	SL	10.00	16	68,800.			68,800.	68,800.		0.
49	ENGINE 102 PUMP	12 17 87	SL	10.00	16	2,800.			2,800.	2,800.		0.
50	ENGINE 101 RADIO/REPEAT	09 01 88	SL	10.00	16	5,639.			5,639.	5,639.		0.
51	ENGINE 101 REBUILT ENGINE	10 01 88	SL	10.00	16	2,960.			2,960.	2,960.		0.
52	ENGINE 101 DRAFT HOSE	11 01 88	SL	10.00	16	912.			912.	912.		0.
53	ENGINE 102 TEMPEST FAN	06 01 95	SL	10.00	16	1,421.			1,421.	1,421.		0.
54	20 NEW MONITORS	08 01 87	SL	10.00	16	8,000.			8,000.	8,000.		0.

(D) - Asset disposed

* ITC, Section 179, Salvage, Bonus, Commercial Revitalization Deduction

- CURRENT YEAR FEDERAL - SHINNSTON VOLUNTEER FIRE DEPARTMENT

Asset No.	Description	Date Acquired	Method	Life	Line No.	Unadjusted Cost Or Basis	Bus % Excl	* Reduction In Basis	Basis For Depreciation	Accumulated Depreciation	Current Sec 179	Current Year Deduction
55	XL98A SAW	12 10 89	SL	10.00	16	650.			650.	650.		0.
56	20 BREATHING UNITS HOSE	02 01 96	SL	10.00	16	12,633.			12,633.	12,633.		0.
57	6 BREATHING UNITS	12 01 99	SL	7.00	16	17,318.			17,318.	17,318.		0.
58	FIRE RADIOS	05 19 99	SL	7.00	16	863.			863.	863.		0.
59	PARTS FOR BREATHING APPARATUS	02 15 98	SL	10.00	16	1,245.			1,245.	1,245.		0.
60	FIRE HOSE	10 04 00	SL	7.00	16	1,229.			1,229.	1,229.		0.
61	REBUILT ENGINE	10 28 02	SL	5.00	16	13,216.			13,216.	13,216.		0.
62	TWO STORY BUILDING	02 01 76	SL	20.00	16	175,000.			175,000.	175,000.		0.
63	FRONT PORCH ADDITION	09 10 87	SL	15.00	16	1,979.			1,979.	1,979.		0.
64	GARAGE DOORS	10 01 87	SL	15.00	16	570.			570.	570.		0.
65	NEW ROOF	11 04 87	SL	20.00	16	14,000.			14,000.	14,000.		0.
66	FRONT DOORS	04 11 88	SL	15.00	16	1,550.			1,550.	1,550.		0.
67	OFFICE ADDITIONS	06 20 88	SL	15.00	16	1,392.			1,392.	1,392.		0.
68	NEW FURNACE	09 30 89	SL	15.00	16	8,700.			8,700.	8,700.		0.
69	DOOR	02 15 98	SL	10.00	16	736.			736.	736.		0.
70	SIGN	06 15 98	SL	10.00	16	1,242.			1,242.	1,242.		0.
71	NEW RADIOS	01 07 79	SL	7.00	16	1,100.			1,100.	1,100.		0.
72	NEW MONITORS	08 17 81	SL	7.00	16	1,455.			1,455.	1,455.		0.

(D) - Asset disposed

* ITC, Section 179, Salvage, Bonus, Commercial Revitalization Deduction

- CURRENT YEAR FEDERAL - SHINNSTON VOLUNTEER FIRE DEPARTMENT

Asset No.	Description	Date Acquired	Method	Life	Line No.	Unadjusted Cost Or Basis	Bus % Excl	* Reduction In Basis	Basis For Depreciation	Accumulated Depreciation	Current Sec 179	Current Year Deduction
73	FURNITURE/FIXTURES	04 01 86	SL	7.00	16	1,579.			1,579.	1,579.		0.
74	INTERCOM SYSTEM	08 01 88	SL	7.00	16	833.			833.	833.		0.
75	20 NEW MONITORS	02 01 91	SL	7.00	16	4,800.			4,800.	4,800.		0.
76	WASHER & DRYER	09 25 91	SL	7.00	16	490.			490.	490.		0.
77	THOMPSONS APPLIANCES	03 01 96	SL	10.00	16	1,133.			1,133.	1,133.		0.
78	TV & VCR	01 26 99	SL	7.00	16	1,037.			1,037.	1,037.		0.
79	WEIGHTS	03 26 99	SL	7.00	16	1,440.			1,440.	1,440.		0.
80	COPIER	11 27 00	SL	5.00	16	1,300.			1,300.	1,300.		0.
81	TABLES - UPSTAIRS	11 14 00	SL	7.00	16	1,767.			1,767.	1,767.		0.
82	COMPUTERS - OFFICE	09 09 02	SL	5.00	16	3,500.			3,500.	3,500.		0.
83	COMPUTERS - OFFICE	09 23 02	SL	5.00	16	3,000.			3,000.	3,000.		0.
84	LAND - 37 BRIDGE STREET	02 01 76	L			9,000.			9,000.			0.
85	LAND - LALAH MARTIN PROPERTY	06 01 08	L			11,033.			11,033.			0.
86	LAND - 27 BRIDGE STREET	02 01 76	L			17,112.			17,112.			0.
87	LAND - DOUGLAS PROPERTY	06 01 08	L			66,746.			66,746.			0.
88	LAND - MARIE PRICE PROPERTY	06 01 08	L			49,646.			49,646.			0.
89	LAND - FRANK OLIVER PROPERTY	06 01 08	L			44,130.			44,130.			0.
90	COMPUTERS	09 16 09	SL	5.00	16	1,905.			1,905.	1,905.		0.

(D) - Asset disposed

* ITC, Section 179, Salvage, Bonus, Commercial Revitalization Deduction

- CURRENT YEAR FEDERAL - SHINNSTON VOLUNTEER FIRE DEPARTMENT

Asset No.	Description	Date Acquired	Method	Life	Line No.	Unadjusted Cost Or Basis	Bus % Excl	* Reduction In Basis	Basis For Depreciation	Accumulated Depreciation	Current Sec 179	Current Year Deduction
91	PIERCE FIRE TRUCK	09 21 11	SL	15.00	16	547,928.			547,928.	356,157.		36,529.
92	THERMAL IMAGING CAMERA	10 20 14	SL	5.00	16	6,000.			6,000.	6,000.		0.
93	OUTSIDE LIGHTS	09 11 16	SL	7.00	16	6,136.			6,136.	4,238.		877.
94	NEW SELF CONTAINED BREATHING APPARATUS	03 17 18	SL	7.00	16	35,443.			35,443.	16,455.		5,063.
95	NEW SELF CONTAINED BREATHING APPARATUS	04 12 18	SL	7.00	16	36,178.			36,178.	16,796.		5,168.
96	RADIO EQUIPMENT	04 01 22	SL	7.00	16	18,030.			18,030.			644.
97	TRUCK BED FOR SQUAD 10	06 15 22	SL	7.00	16	15,000.			15,000.			179.
98	NEW PORTABLE RADIOS	06 15 22	SL	7.00	16	16,617.			16,617.			198.
99	RUSSELL PROPERTY	08 13 21	L			55,000.			55,000.			0.
	* TOTAL 990 PAGE 10 DEPR					2,117,189.		0.	2,117,189.	1,557,982.		49,445.
	CURRENT YEAR ACTIVITY											
	BEGINNING BALANCE					2,012,542.		0.	2,012,542.	1,557,982.		
	ACQUISITIONS					104,647.		0.	104,647.	0.		
	DISPOSITIONS					0.		0.	0.	0.		
	ENDING BALANCE					2,117,189.		0.	2,117,189.	1,557,982.		

(D) - Asset disposed

* ITC, Section 179, Salvage, Bonus, Commercial Revitalization Deduction

Greater Harrison County
Public Service District

C-10

PO Box 190
West Milford, WV
26451

Phone: 304-745-3463
Fax: 304-745-5327

www.greaterharrison.com

At the regular meeting of Greater Harrison County PSD held on Thursday July 21, 2022, Chairman James Scudere, Treasurer Ruth Ann Messenger, Secretary Mark Leonard and Member Thomas Michael were present. Also present were Bill Hoover, General Manager, Sam Harrold of Mountain State Law, Logan Alastanos, Kylea Radcliff, Conner Wickline and Brant Busdecker of Thrasher Engineering, Patrick Lesmann of P & B Services and Mike Crim.

1. Minutes and/or Amended Minutes of Previous Meeting and Special Meeting: Michael moved to approve based on the addition that a motion was made to come back into regular session from executive session. Board concurred.
2. Public Comment Period: None present
3. Patrick Lesmann – P&B Services
   General update – All plants are operating well. Worked out programming kinks at Boothsville plant.
4. Zack Dobbins – Bennett and Dobbins provided by Kylea Radcliff and Logan Alastanos of Thrasher Engineering
   4.1. Resolution/Construction Drawdowns
   - Resolution #37 for Enterprise Project. Scudere moved to approve. Board concurred.
   - Resolution #4 for Stevens Run Project. Leonard moved to approve. Board concurred.
   - Resolution #23 for Enterprise Project. Scudere moved to approve. Board concurred.
5. Finance Report provided by Ruth Ann Messenger
   - Scudere moved to approve financial transactions. Board concurred
6. Thrasher Engineering
   6.1 Sewer
   6.1.a Phase II
   - Warranty on contract #1 and #2 almost up. Contract #3 questions on retainage and seeking funds.

   6.1.b Enterprise Project
   - Multiple issues mentioned by Brant Busdecker "BB" and Kylea Radcliff. All lines are in place, working through testing right now.
   - Change order #5. Leonard moved to approve. Board concurred.
   - Engineering Amendment #3. Scudere moved to approve. Board concurred

   6.1.c Sludge Removal Project
   - Redirected and requested authorization to bid and send sludge to land fill.

   6.1.d Quiet Dell
   - Should get reviewed next Tuesday. Submitted formal waste load allocation.

   6.1.e Woodstock Heights Sanitary Sewer Extension Project
   - Working through process, need to develop plan and perhaps abandoned in place application.

   6.1.f 10-year plan Sewer
   - Requested 100,000 for Locust Heights and 100,000 for bar screen from the County's 8 million.
   - Pay Resolution #1 related to the bar screen. Bill mentioned that the ARPA accounts at Harrison County Bank had been closed and two more accounts need to be set up. Pay Requisition #1 - Scudere moved to approve. Board concurred.

   6.1.g River Crossings
   - Was listed on McKinley's short list.

6.2.a Steven's Run

- Booster station has arrived and is plumbed in. Can test after one electrical part is received. Pipe for added alternates will arrive around August 23rd.
- Change order #2. Leonard moved to approve. Board concurred.
- Engineering Amendment funding request off by $10,000. Not on agenda. Engineering Agreement Amendment #2. Scudere moved to approve. Board concurred. Hoover and Michael request to have special meeting for approval of Engineering Agreement Amendment #2 and ARPA funding accounts. Michael motioned to rescind approval of Engineering Amendment #2. Board concurred.

6.2.b Overall Water Project

- Submitted application and Preliminary Engineering report. Seeking Economic Enhancement Grant.

6.2.c Locust Heights

- Rerouted through County. Jean Mason agreed to sell a piece of land, need surveyed.
- Resolution #1. Scudere moved to approve. Board concurred.

6.2.d 10-year plan Water

- No update at this time

7. Bill Hoover – General Manager

7.1 Water

7.1.a . Water loss overall 28%. Coon's Run at 19%.

7.1.b. Found leak Coon's Run on River Bank. Lost Creek had 2 mainline leaks and 1 service line, VGH 3 service line leaks

7.2. Sewer

7.2.a. General Update

- We have had issues with duck weed at the plant and Woodstock Heights. It is the worst I have seen in 20 years.
- Two right of ways are needed for Woodstock Heights.
- We had an issue with 2 lift stations on Phase I and II, it is recommended we pull and clean out.

7.3 Good of the District

7.3.a. Lead and Copper we sent 77 letters to Fair Oak's customers with 36 responses. We will be sending out the balance of Coon's Run next week.

7.3.b. DNR is wanting to put a boat ramp in on the back entrance of Country Club by the blue bridge. Sam has been provided with a couple lease agreements. Sam Harrold provided information on sell and disposal of property.

7.3.c. Sinclair's put in 6 x 6 to protect fence and they were hit by lawncare company. We drove posts in the ground by the 6 x 6's to protect the fence. Recommend paving part of the plant access road to cut down on dust.

7.3.d. We have 50 lift and grinder stations that get neglected, we do not have time to check all regularly. We will have to hire someone to maintain and log these stations. With Enterprise we will have 4 more. We also need a crane truck, ours is constantly requiring repair.

7.3.e. Cost of insurance for employees with families. Employee requesting help with premiums. Can add to agenda for next month or advise we can look at on next years budget.

8. Sam Harrold – Mountain State Law

8.1 Nothing additional to add

9. Executive Session
   - Michael moved to go into Executive Session. Board concurred.
   - Michael moved to go out of Executive Session and back into regular session at 7:05 pm. Board concurred.
   - Michael added that with regards to the letter Kylea received the board is of the opinion that it is time to get our attorneys involved and they will work with you and whatever Mr. Crim wants to do; that's where we are at.

Leonard moved to adjourn meeting. Board concurred.
Meeting adjourned

Chairman James Scudere

Treasurer Ruth Ann Messenger

Secretary Mark Leonard

Member Thomas Michael

"THIS IS AN EQUAL OPPORTUNITY PROGRAM. DISCRIMINATION IS PROHIBITED BY FEDERAL LAW." TO FILE A COMPLAINT OF DISCRIMINATION, WRITE USDA, DIRECTOR OFFICE OF CIVIL RIGHTS, 1400 INDEPENDENCE AVE., S.W., WASHINGTON, DC 20250-9410 OR CALL (800)795-3272(VOICE) OR (202)720-6382 (TDD).

Greater Harrison County
Public Service District

C-11 PO Box 150
West Milford, WV
26451

Phone: 304-745-3463
Fax: 304-745-5327

www.greaterharrison.com

At the special meeting of Greater Harrison County PSD held on Thursday July 28, 2022 via teleconference; Chairman James Scudere, Treasurer Ruth Ann Messenger, Secretary Mark Leonard and Member Thomas Michael were present. Also present were Bill Hoover, General Manager, Zack Dobbins of Bennett and Dobbins, Logan Alastanos and Kylea Radcliff of Thrasher Engineering. Special meeting called to order at 2 pm by Chairman James Scudere.

1. The Thrasher Group, Inc.
   1.1. Water
      1.1.a. Steven's Run Phase II
         - Engineering Agreement #2 Michael moved to approve. Board concurred.

2. Bill Hoover – General Manager
   2.1 Good of the District
      2.1.a. Approval of ARPA bank accounts
         - Scudere moved to approve ARPA accounts. Board concurred.

Leonard motioned to adjourn meeting at 2:05 pm. Board concurred.

Chairman James Scudere

Treasurer Ruth Ann Messenger

Secretary Mark Leonard

Member Thomas Michael

"THIS IS AN EQUAL OPPORTUNITY PROGRAM. DISCRIMINATION IS PROHIBITED BY FEDERAL LAW." TO FILE A COMPLAINT OF DISCRIMINATION, WRITE USDA, DIRECTOR OFFICE OF CIVIL RIGHTS, 1400 INDEPENDENCE AVE., S.W., WASHINGTON, DC 20250-9410 OR CALL (800)795-3272(VOICE) OR (202)720-6382 (TDD).

D.

Mayor
P. Eddie Hardman

Recorder
Anna Harvey

The Town of Anmoore

PO Box 178 Anmoore WV 26323
304-622-7431

Council
Jennifer Linn
Wendy Posey
Cathy Riley
Jeff Wade
Billy Campbell

August 11, 2022

RE: ARPA Allocation for the Town of Anmoore

Dear Members of Harrison County Commission,

The Town of Anmoore would like to express their appreciation and gratitude to the Harrison County Commission for including Anmoore in the allocation of the ARPA funds. We will use the money for a Wastewater System Improvements project which considers the potential rehabilitation of the existing gravity sewer collection system in an effort to increase the accountability of the system.

The Town of Anmoore has signed a contract with Thrasher Engineering to do a Study and Report Phase which will include I & I study of the sewer system. This project will focus on evaluating the capacity and reducing inflow and infiltration in the wastewater collection system.

As our system was installed in the 1970's and we have had some recent issues especially with the Wal Mart area, we believe that pursuing the future upkeep of the sewer system would be the best use of the funds at this time. The Town anticipates moving forward with a full project if warranted after the conclusions determined by the investigations.

Sincerely,

Anna Harvey
Recorder for Town of Anmoore

Empty Bowls
Harrison County







Harrison County 4-H invites you!

Empty Bowls Soup-er Luncheon

Sunday, September 25, 2022

First United Methodist Church: Corner of Pike and 2nd St. Downtown Clarksburg

Join us anytime between **11:00 a.m. - 2:30 p.m.**

TICKETS: $15 (includes hand-painted bowl)

$10 (without bowl) • **$5** (child 5 and under without bowl)

Call today: (304) 624-8650

Order forms can be requested: elizabeth.skidmore@mail.wvu.edu

PROCEEDS BENEFIT: THE MUSTARD SEED and THE CLARKSBURG MISSION

Harrison County 4-H Leaders Association
c/o 1117 Good Hope Pike
Clarksburg, WV 26301

August 23, 2022



Harrison County Commission
Susan Thomas, President
David Hinkle
Patsy Trecost
301 W. Main Street, Suite 504
Clarksburg, WV 26301

Dear Commissioners:

Members of the Harrison County 4-H Leaders' Association are pleased to report a very active and successful year. The county's WVU Extension office wrapped up summer camp at Jackson's Mill in June with 185 youth and 50-plus volunteer staff/instructors attending. As has been the custom during our summer camp, 4-H youth and leaders completed a service project. This year we were able to help Rise Against Hunger by packaging 14,256 bags containing non-perishable, grain-based meals. Pictures below show several of the teams at work.





Below is a synopsis of activities and events in which our 4-H'ers were engaged in thus far in the 4-H club year (October 1, 2021 – September 30, 2022).

Community service projects:

* Adopt-A-Highway cleanups
* Planting flowers at a local nursing home
* Collecting diapers for HOPE, Inc.
* Planting a community garden to help supplement summer food pantry
* Creating Valentine's Day cards and paper flowers for nursing home residents
* Volunteering at Shepherds Corner
* Assisting with Bridgeport Park story walks featuring a different WV author each month
* CASA 5K Superhero Run – 4-H information table with activities for youth
* Collecting non-perishable food for Mustard Seed and blessing boxes
* Creating greeting cards for Veterans at the WV Veterans' Nursing Facility

* Christmas caroling, cards, and treats for community shut-ins
* Decorating floats for, and participating in, Veteran's Day and Christmas parades



The Travel Club (pictured right) sold concessions at several local auctions, had bake sales, hot dog sales, worked the WVU Football Games in the endzone, and sold homemade pepperoni rolls to help pay for their trip to Bellingham, WA. They assessed the water and wildlife at two beaches at Larabe Park, noting high and low tides, type of active wildlife, pollution, etc. The tide was the lowest it's been in 7 years, making it easy to record the pollution and wildlife. They picked up trash along the shore line as their service project. Their findings were reported to Earth Elements for inclusion in their records and to share with other interested parties.

WVU Extension 4-H Youth Development Agent, staff, and 4-H teens recently completed a week of Cloverbud Day Camp with youth who completed Kindergarten-2nd Grade at the Veterans Administration Park. Our youngest 4-H'ers have a great time exploring the park, making crafts, Learning by Doing through STEM activities, swimming, playing and growing 4-H friendships.

Regular monthly club meetings were held with 4-H'ers remaining active with art projects, working on project books, cooking demonstrations, First Aid instruction from paramedics and EMS, archery lessons, family game night, STEM games and projects, gardening, family mini-golf, and camp fires. Over the course of a five-week period, the SPIN (SPecial INterest) club participants focused on learning how to prepare and serve a variety of meals and then ate what they cooked. Cleaning up afterwards was part of the learning experience.

Annual 4-H project and exhibit judging was recently conducted, with 53 blue ribbon books and/or exhibits to be delivered to the State Fair of WV for display.

Above and beyond club meetings and working on selected project books/exhibits, a number of 4-H'ers chose to enter poster competitions. After local judging and advancing to the state level, our youth won contests in four separate divisions with one -- which is featured on this letters' masthead -- being judged as best in state.

Coming in October: National 4-H Month. 4-H banners will be displayed on Main Street and there will be an exhibit at the Clarksburg/Harrison Public Library October 1-15, 2022.

Thank you for your continued support of the WVU Extension Harrison County 4-H Program. Our 4-H youth and volunteers continuously work to "Make the Best Better."

With Regards,
Harrison County 4-H Leaders Association

Michael Dawson, President
Brittany Stire, Vice-President
Tara Sutton, Secretary
Brandy Stire, Treasurer

/DDean





July 2022 Cloverbud Day Camp at Veterans' Park.





4-H club floats for Veterans' Day and Christmas Parades.

4-H SLOGAN: LEARN BY DOING







Campers practice public speaking skills and learn about flag raising/lowering and patriotism.



4-H'ers learn to work in teams.



EXAMPLES OF 4-H CAMP CLASSES

Automotive





Cooking

Outdoor Adventures



Robotics





Basket weaving



Sewing

It wouldn't be camp without sports!







SPIN classes teach teamwork, cooking skills, mathematics, and clean-up.







Post-camp swim party at Veteran's Park Splash Zone.